SIGMA
PRECISION CRAFTED

SPECIFICATIONS

Contemporary Deckmount Tub Filler with Handshower and Ceres II Handles

1.0050510

FEATURES:

- All brass construction.
- Available in all Sigma finishes
- Replacement cartridges
  18.30.010 - COLD / 18.30.011 - HOT
- Flow rate 7.5 gpm / 45 psi

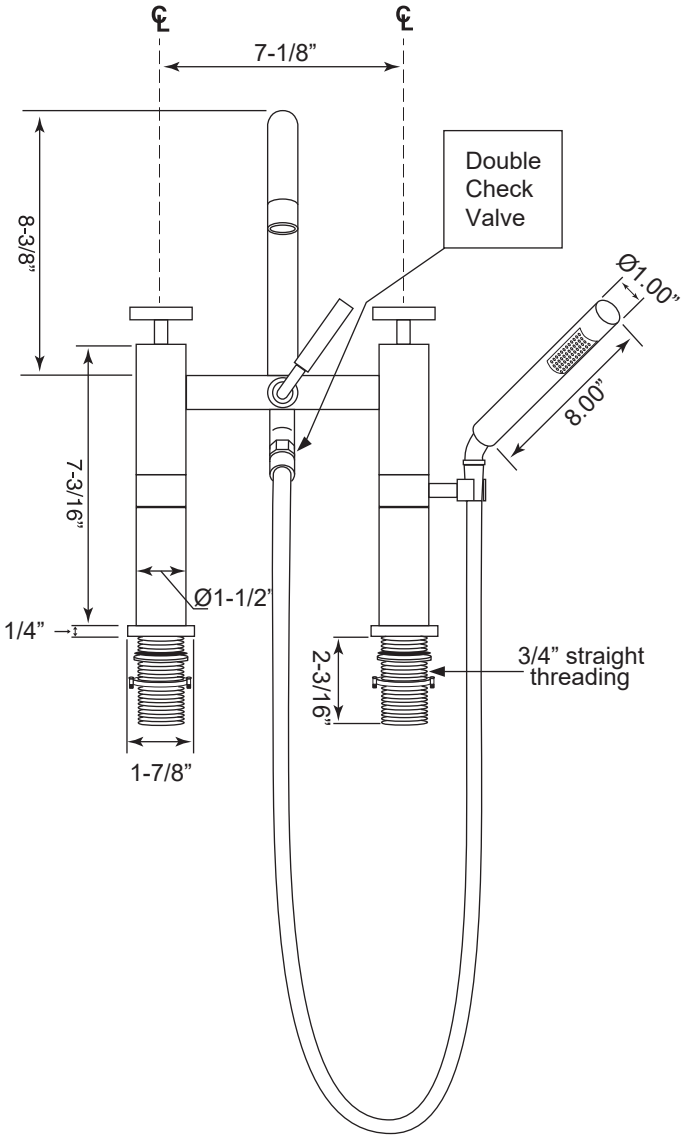

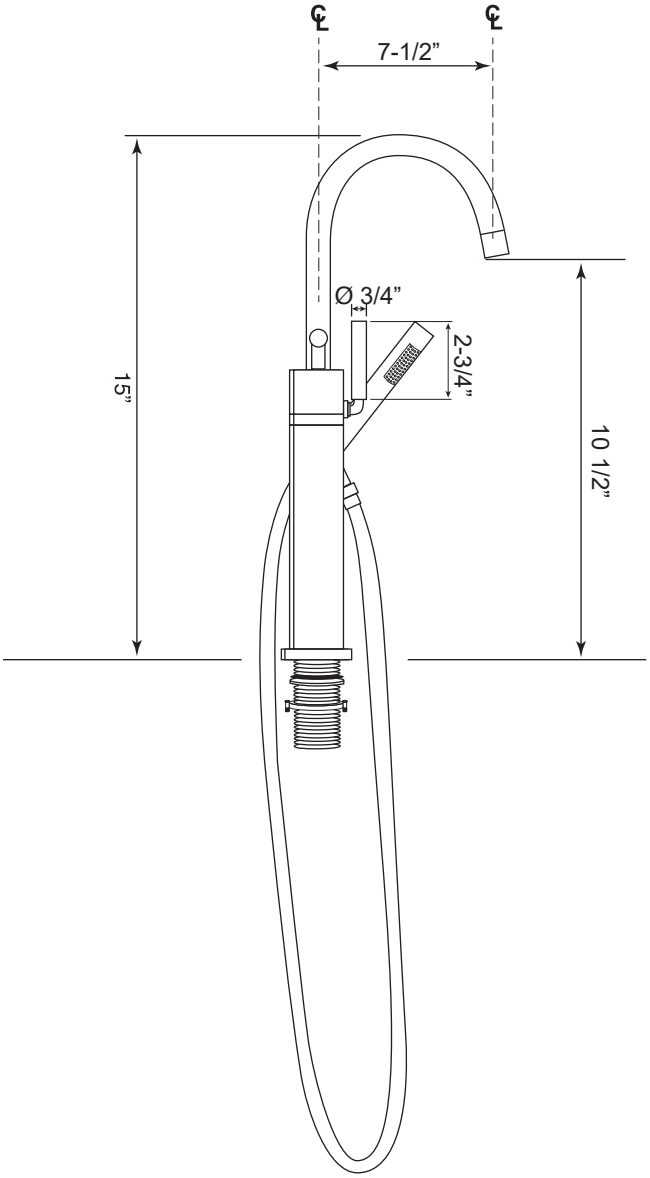

Note: Measurements are subject to change or cancellation. No responsibility is assumed for use of superseded or voided pages.