SIGMA
PRECISION CRAFTED

PARTS LIST

1.004497D

3/4" Thermostatic Set
with Integral Stops with
Palermo Lever

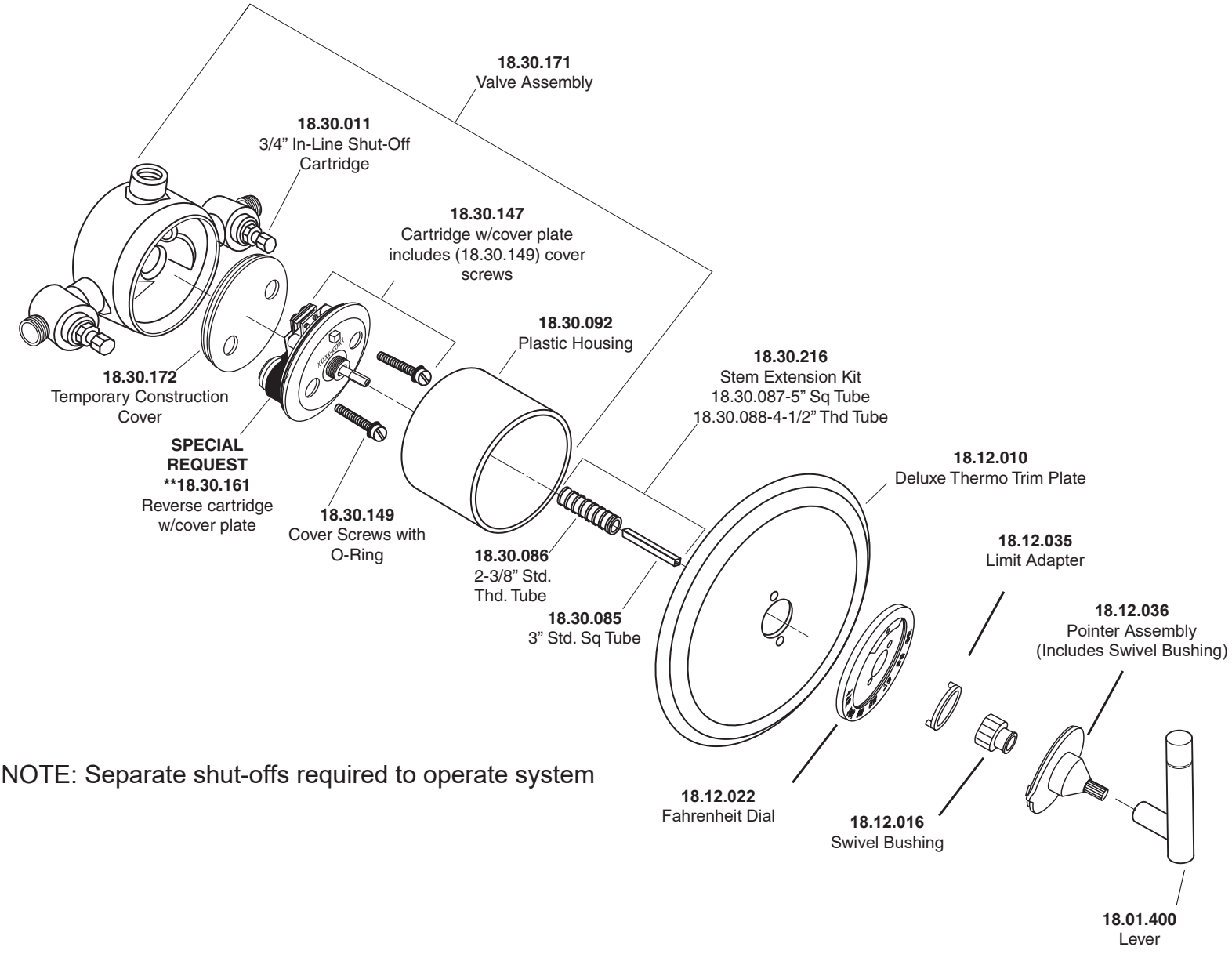

NOTE: Separate shut-offs required to operate system