SIGMA
PRECISION CRAFTED

Parts List

New Hampton 3/4” Thermostatic without Integral Stops

1.004397

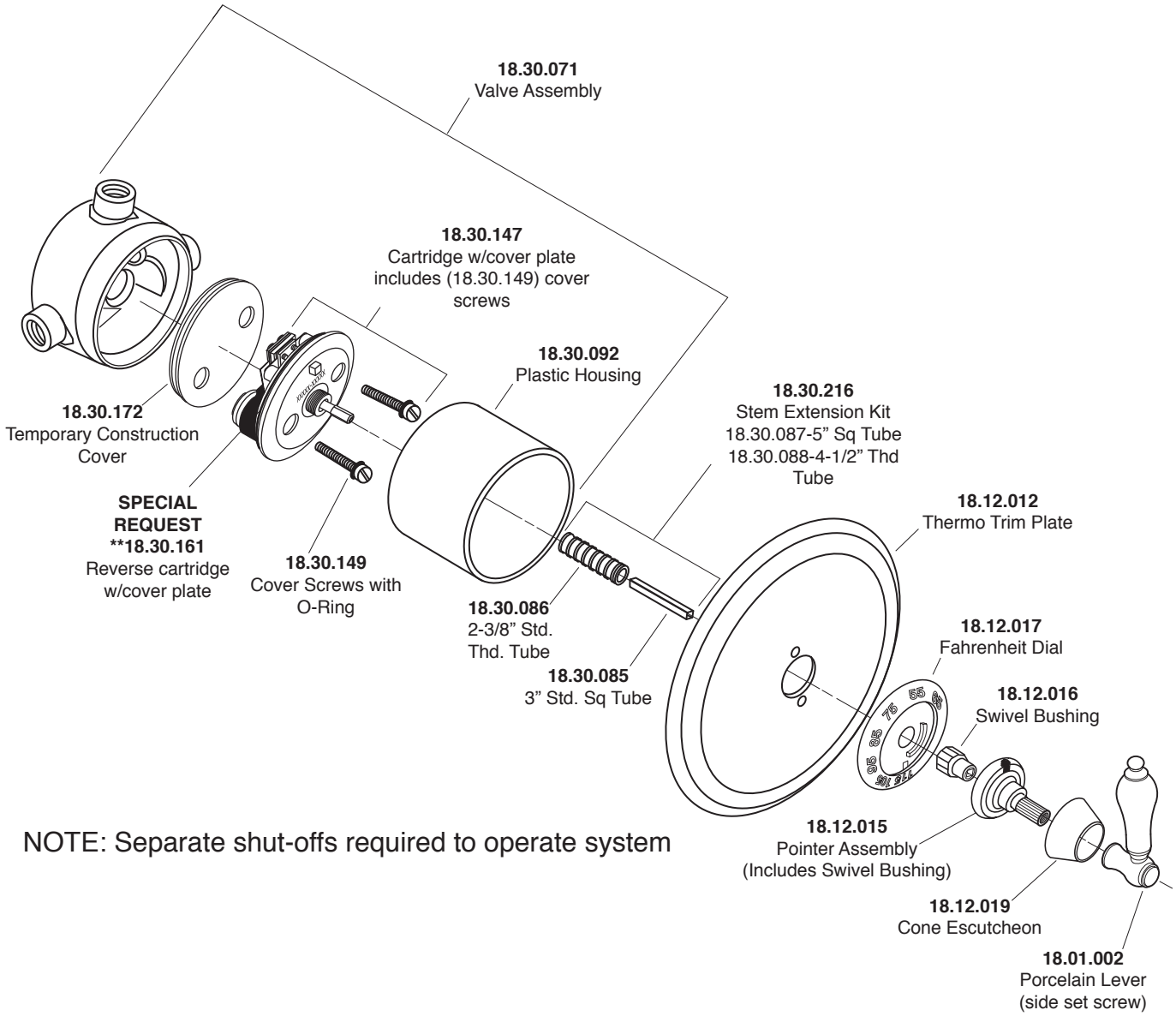

NOTE: Separate shut-offs required to operate system

American Faucet & Coatings Corporation.

Tel: 760-598-5895, Toll Free Fax 800-621-8383, customerservice@sigmafaucet.com