SIGMA
PRECISION CRAFTED

PARTS LIST

1.006497

3/4” Thermostatic Set without Integral Stops with Bordeaux Lever

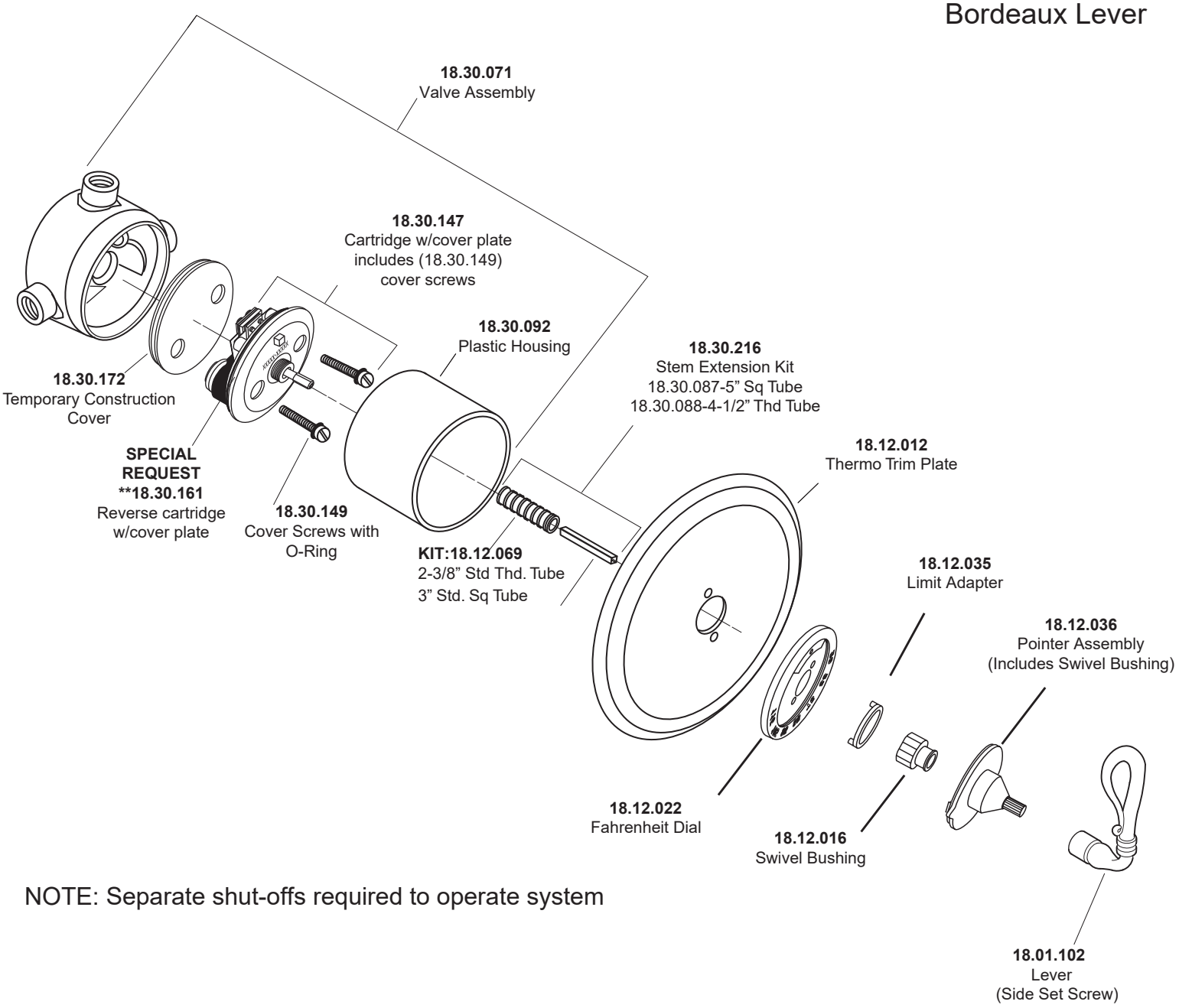

NOTE: Separate shut-offs required to operate system