SIGMA
PRECISION CRAFTED

PARTS LIST

1.000496.V0

1/2” Thermostatic Set
without Volume Control
with Charlotte Lever

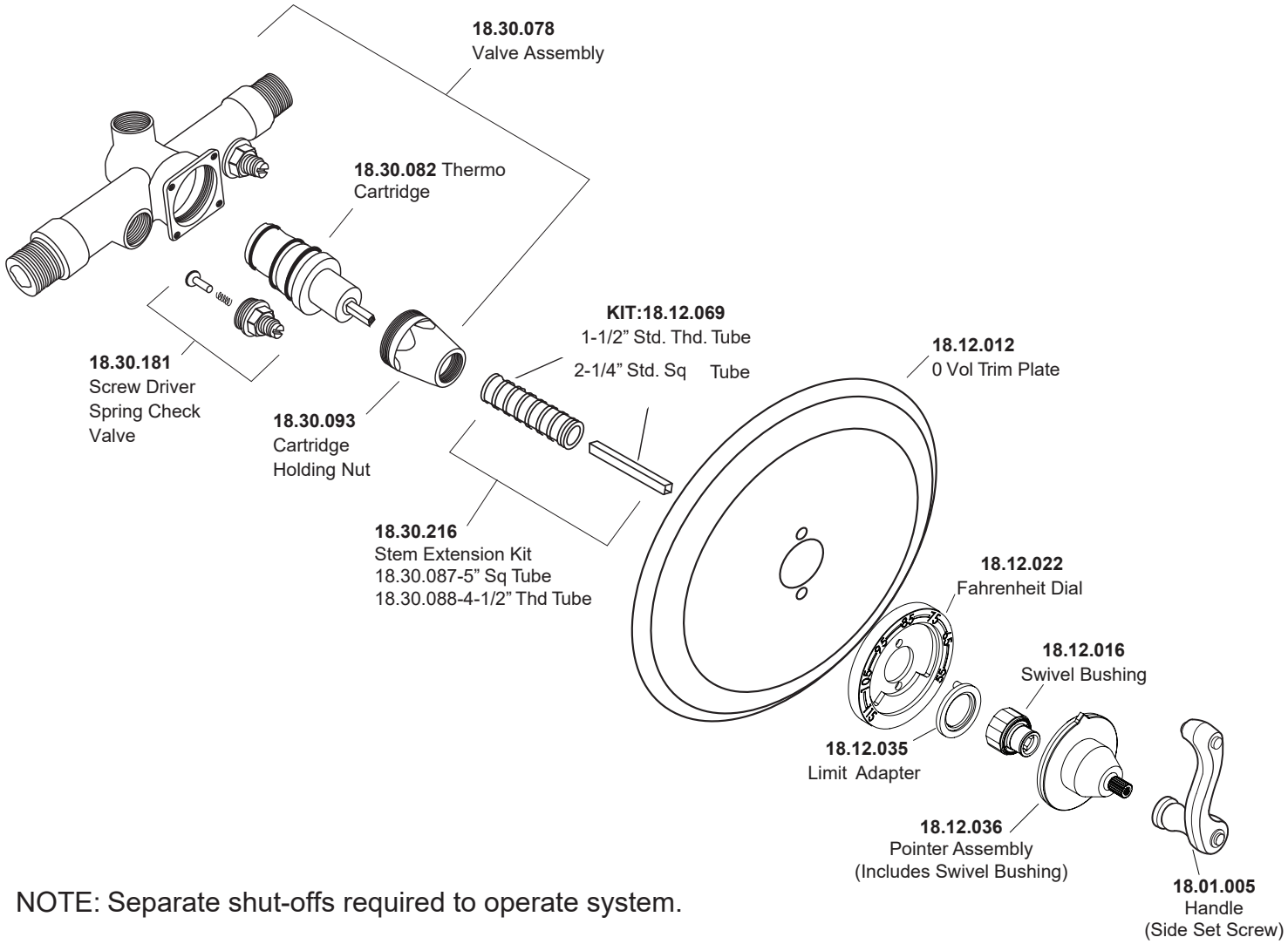

NOTE: Separate shut-offs required to operate system.