SIGMA
PRECISION CRAFTED

PARTS LIST

1.000696.V2
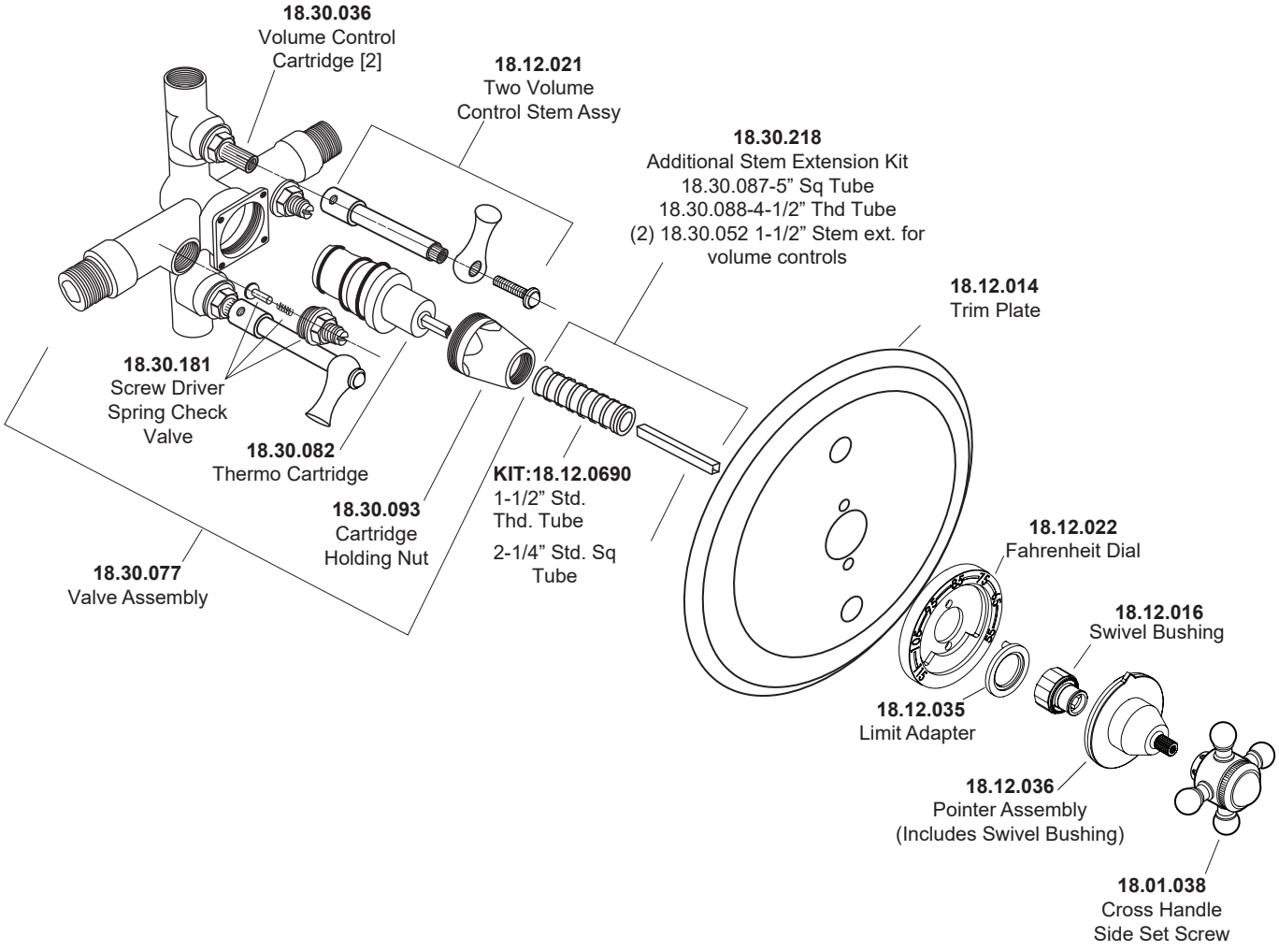
1/2” Thermostatic Shower Set with Two Volume Controls and Portsmouth Cross Handle