SIGMA
PRECISION CRAFTED

PARTS LIST

1.001296.V2
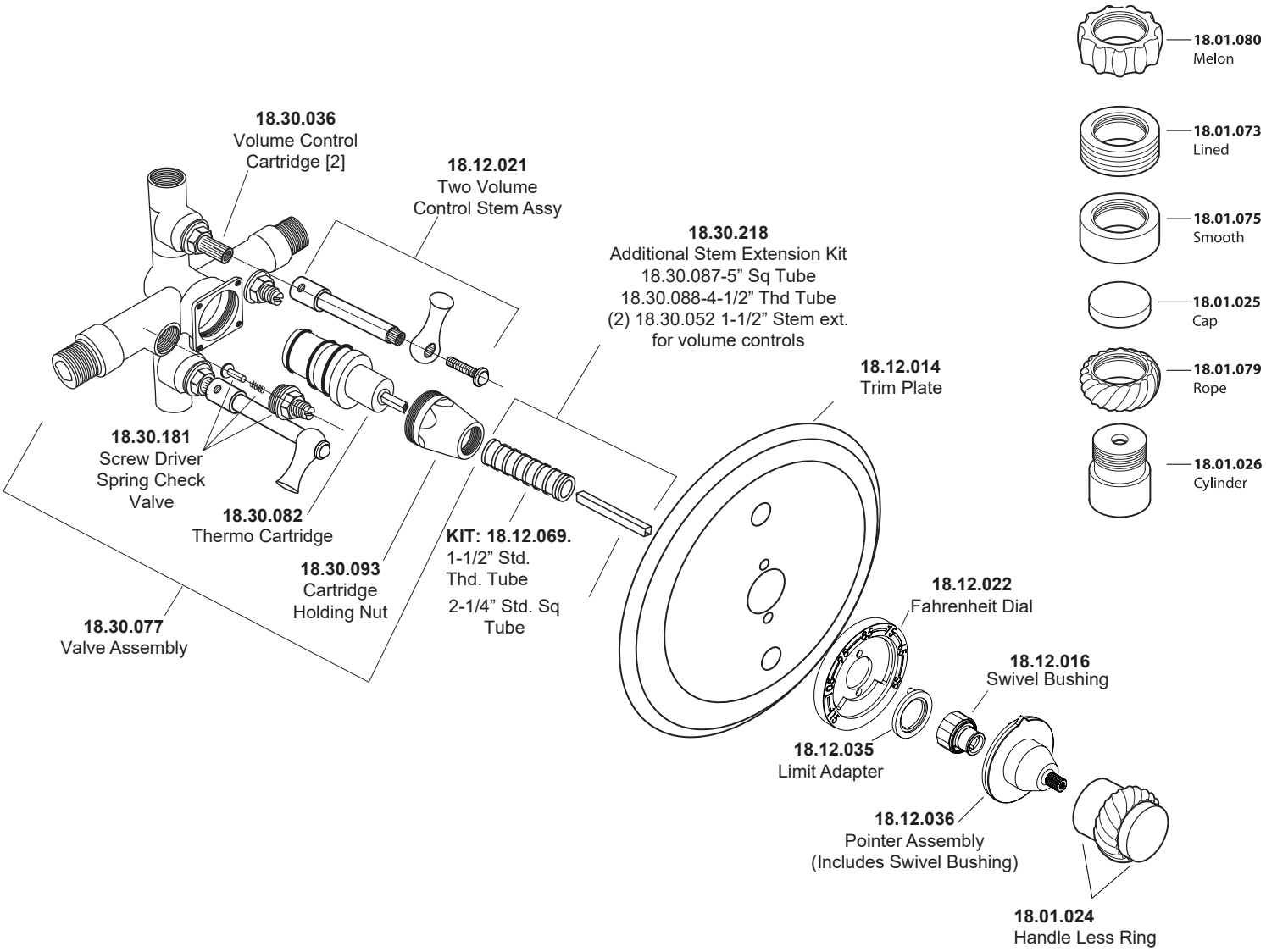
1/2” Thermostatic Shower Set with Two Volume Controls and Seville Handle