SIGMA
PRECISION CRAFTED

PARTS LIST

1.001396.V0

1/2” Thermostatic Set
without Volume Control
with Hampshire Lever

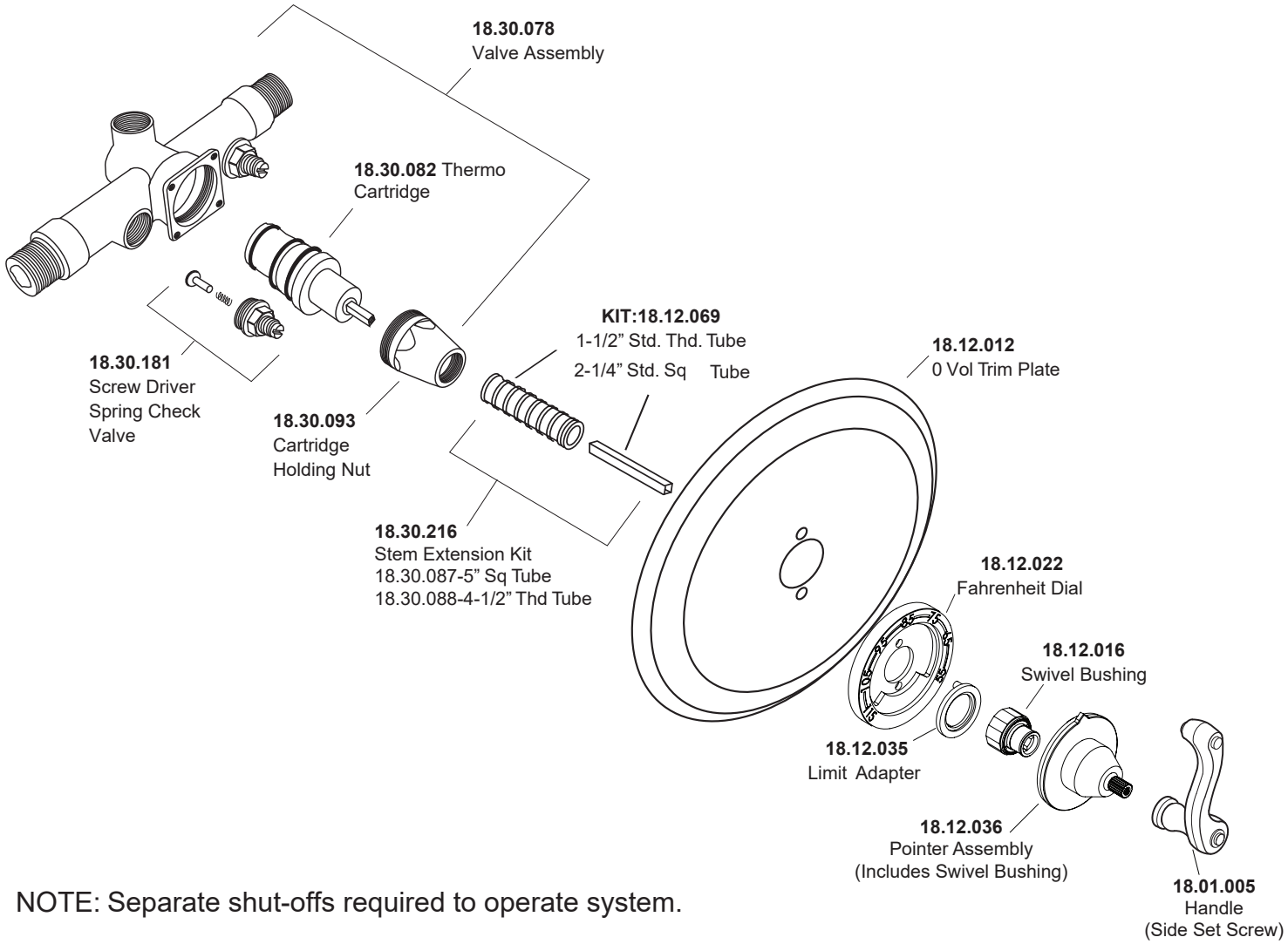

NOTE: Separate shut-offs required to operate system.