SIGMA
PRECISION CRAFTED

PARTS LIST

1.001396.V1
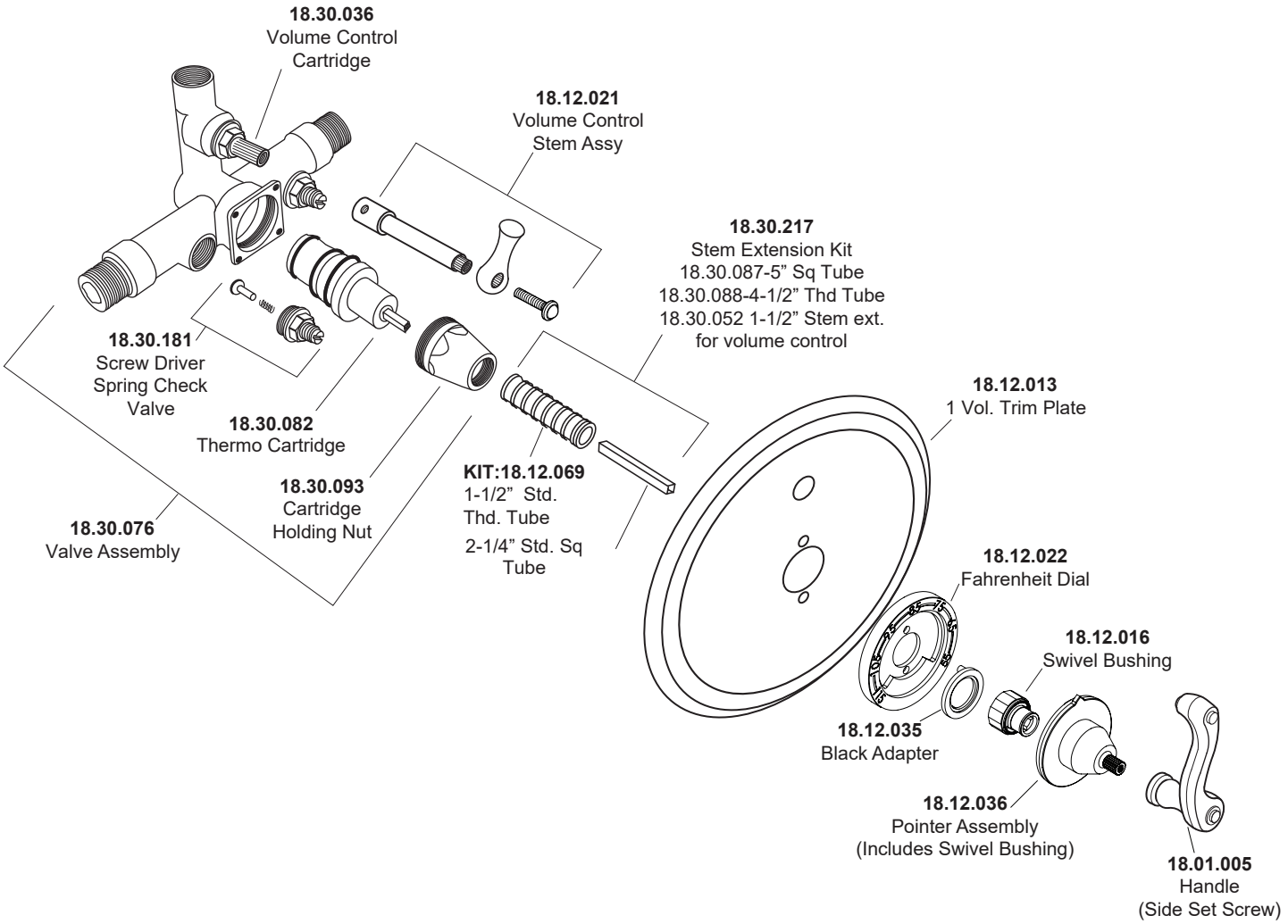
1/2” Thermostatic Set with 1 Volume Control with Hampshire Lever