SIGMA
PRECISION CRAFTED

PARTS LIST

1.004396.V2
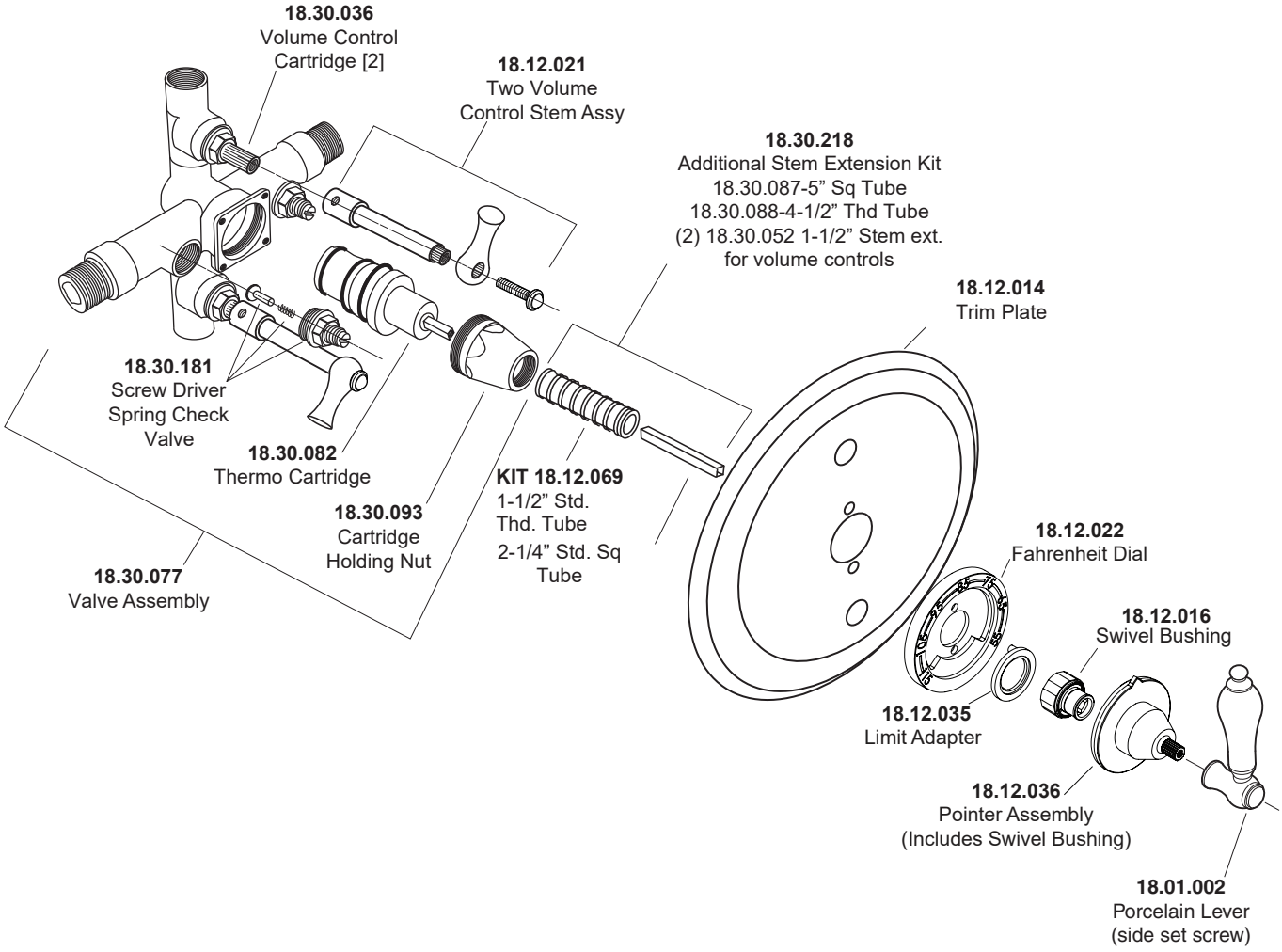
1/2” Thermostatic Shower Set
with Two Volume Controls
and New Hampton Lever