SIGMA
PRECISION CRAFTED

PARTS LIST

1.005696.V2
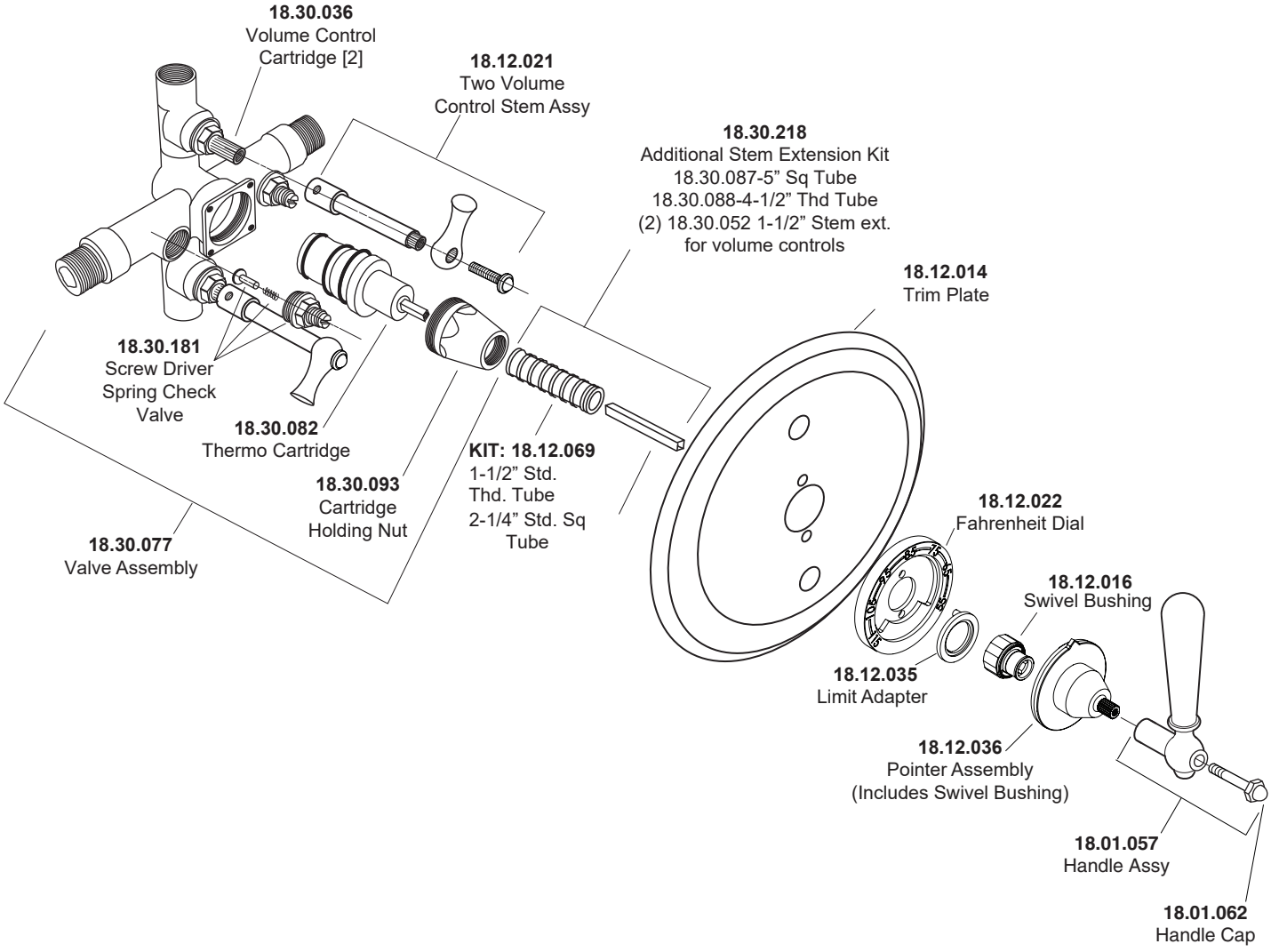
1/2” Thermostatic Shower Set
with Two Volume Controls
and Loire Lever