SIGMA
PRECISION CRAFTED

PARTS LIST

1.005796.V1

1/2” Thermostatic Set
with 1 Volume Control
with Orleans Lever

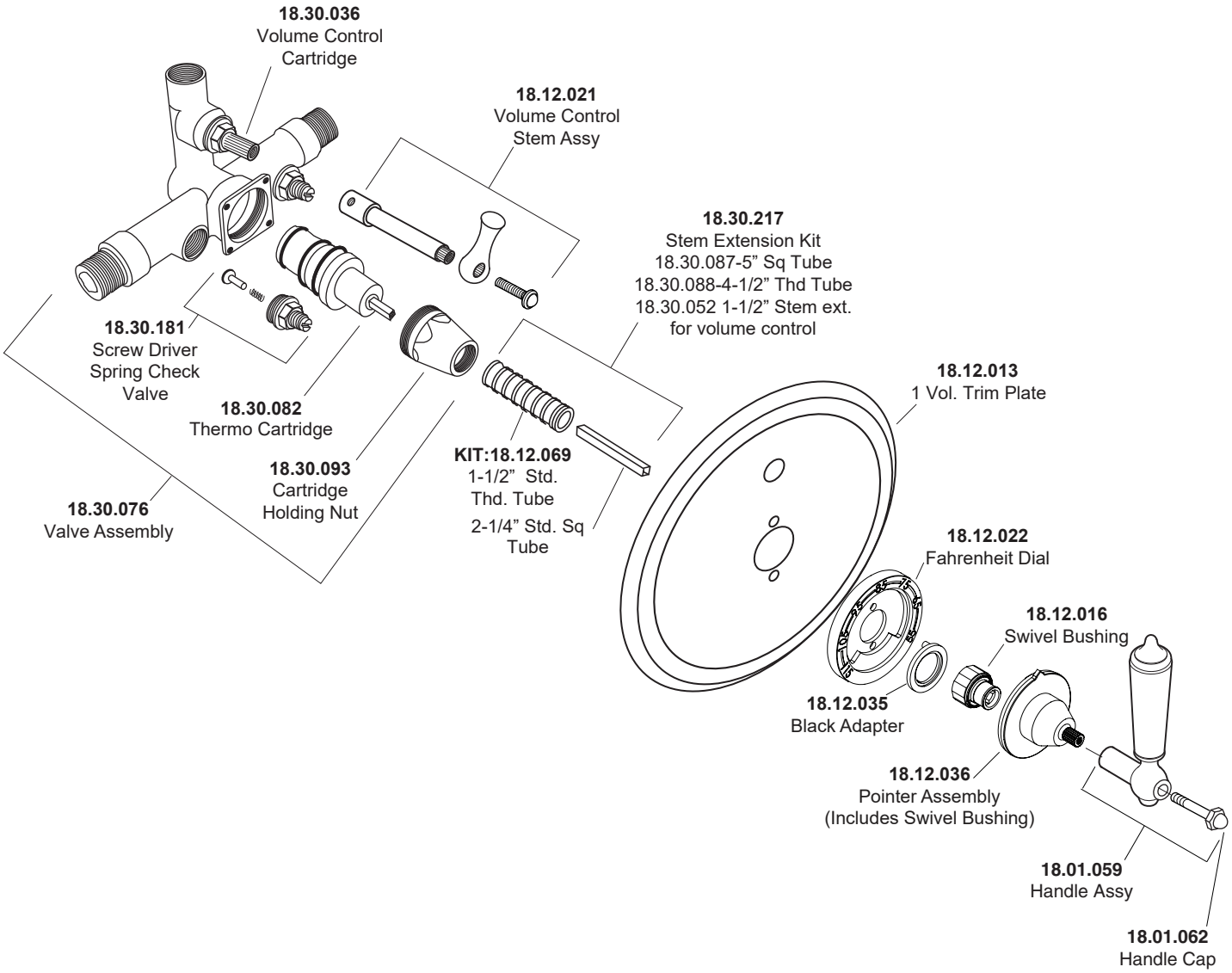

Tel: 760-598-5895, Toll Free Fax 800-621-8383, customerservice@sigmafaucet.com