SIGMA
PRECISION CRAFTED

PARTS LIST

1.005796.V2
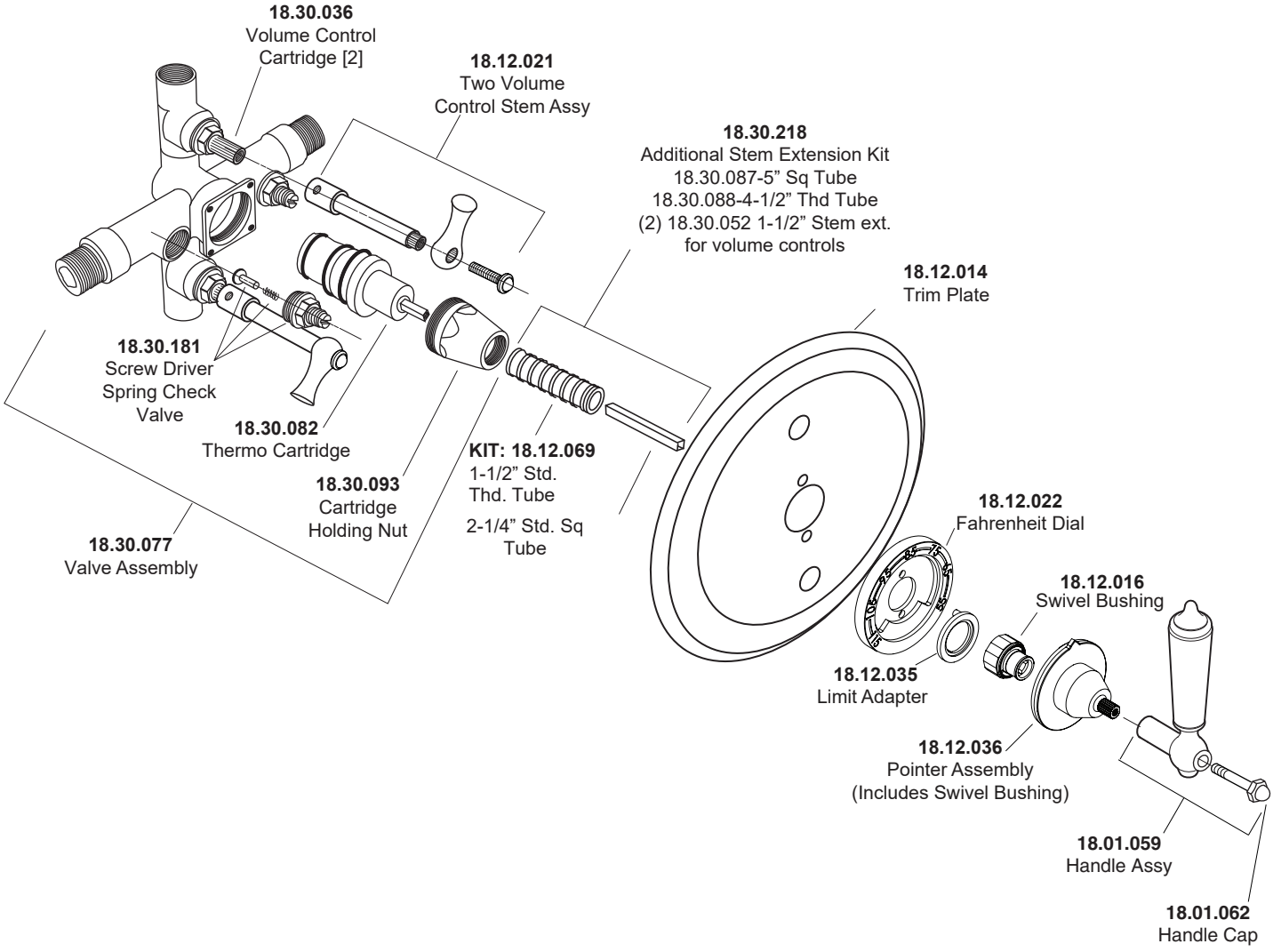
1/2” Thermostatic Shower Set
with Two Volume Controls
and Orleans Lever