SIGMA
PRECISION CRAFTED

Parts List

Portofino
Crystal Lever
1/2” Thermostatic
Two Volume Controls

1.006396.V2

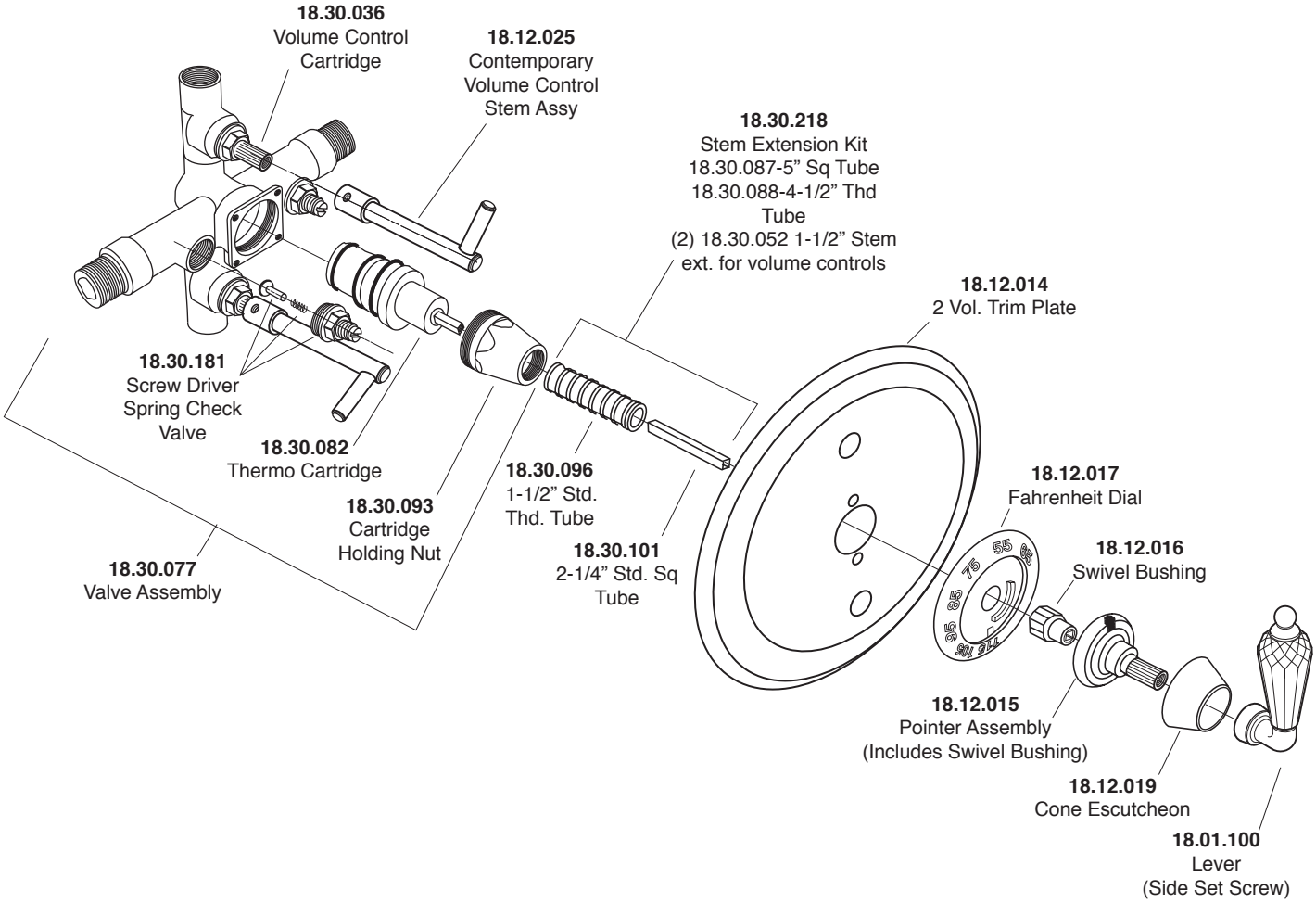

American Faucet & Coatings Corporation.

Tel: 760-598-5895, Toll Free Fax 800-621-8383, customerservice@sigmafaucet.com