SIGMA
PRECISION CRAFTED

PARTS LIST

1.008196.V2
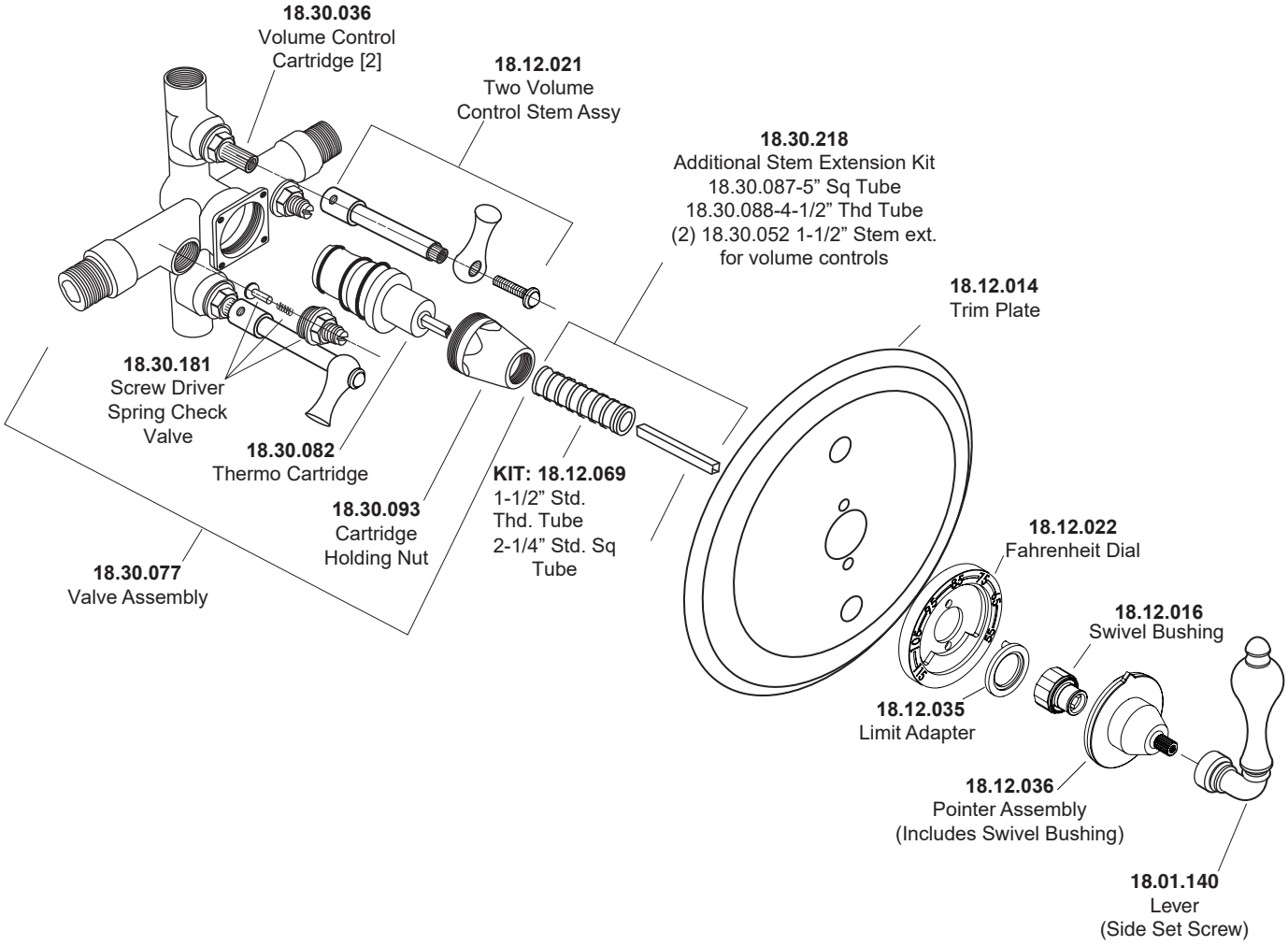
1/2” Thermostatic Shower Set with Two Volume Controls and Houston Lever