SIGMA
PRECISION CRAFTED

PARTS LIST

1.073096.V2

1/2” Thermostatic Shower Set with Two Volume Controls and Carina Lever

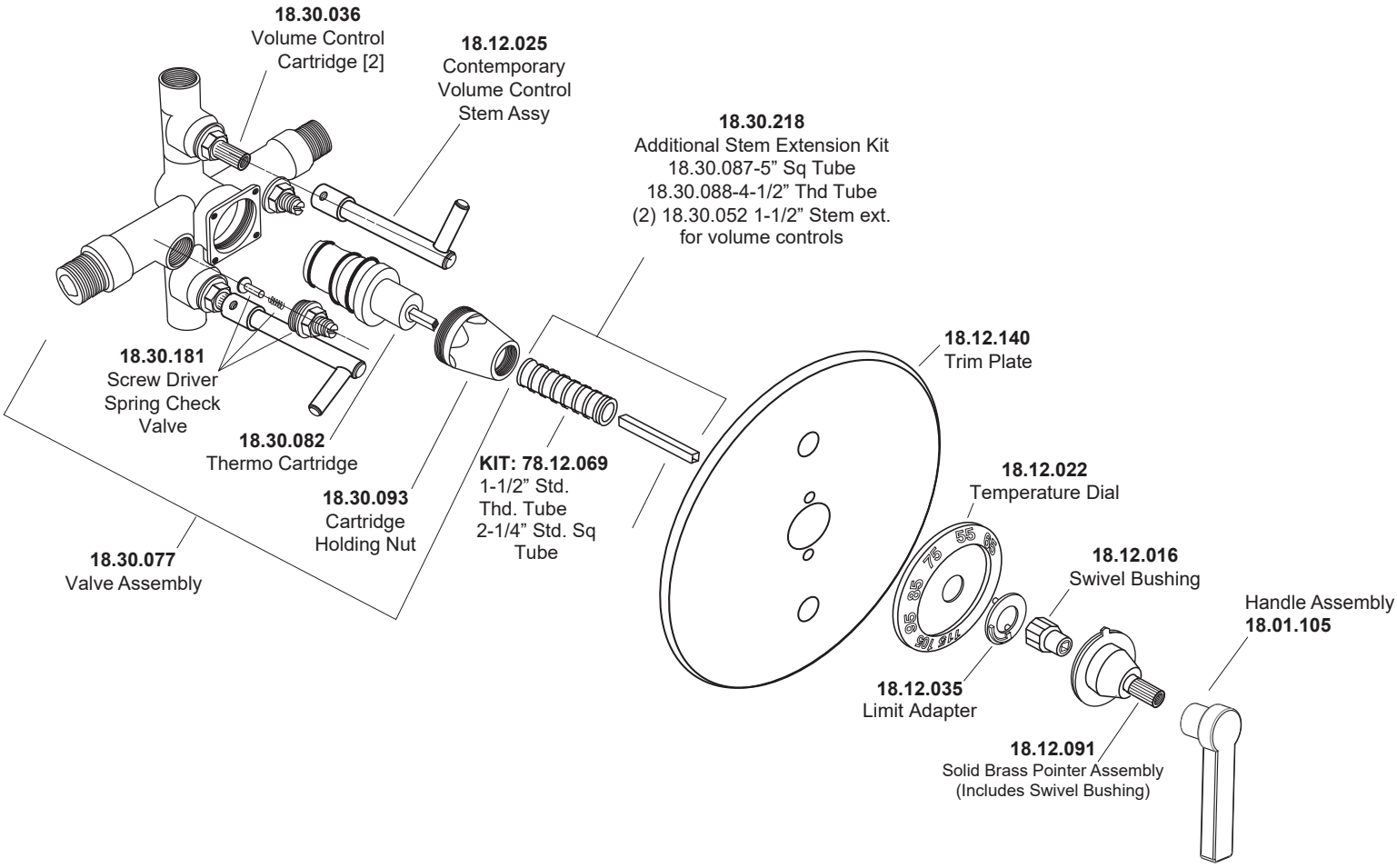

Tel: 760-598-5895, Toll Free Fax 800-621-8383, customerservice@sigmafaucet.com