SIGMA
PRECISION CRAFTED

PARTS LIST

3400 Series Lavatory Set with Ceres II Handles

1.345008

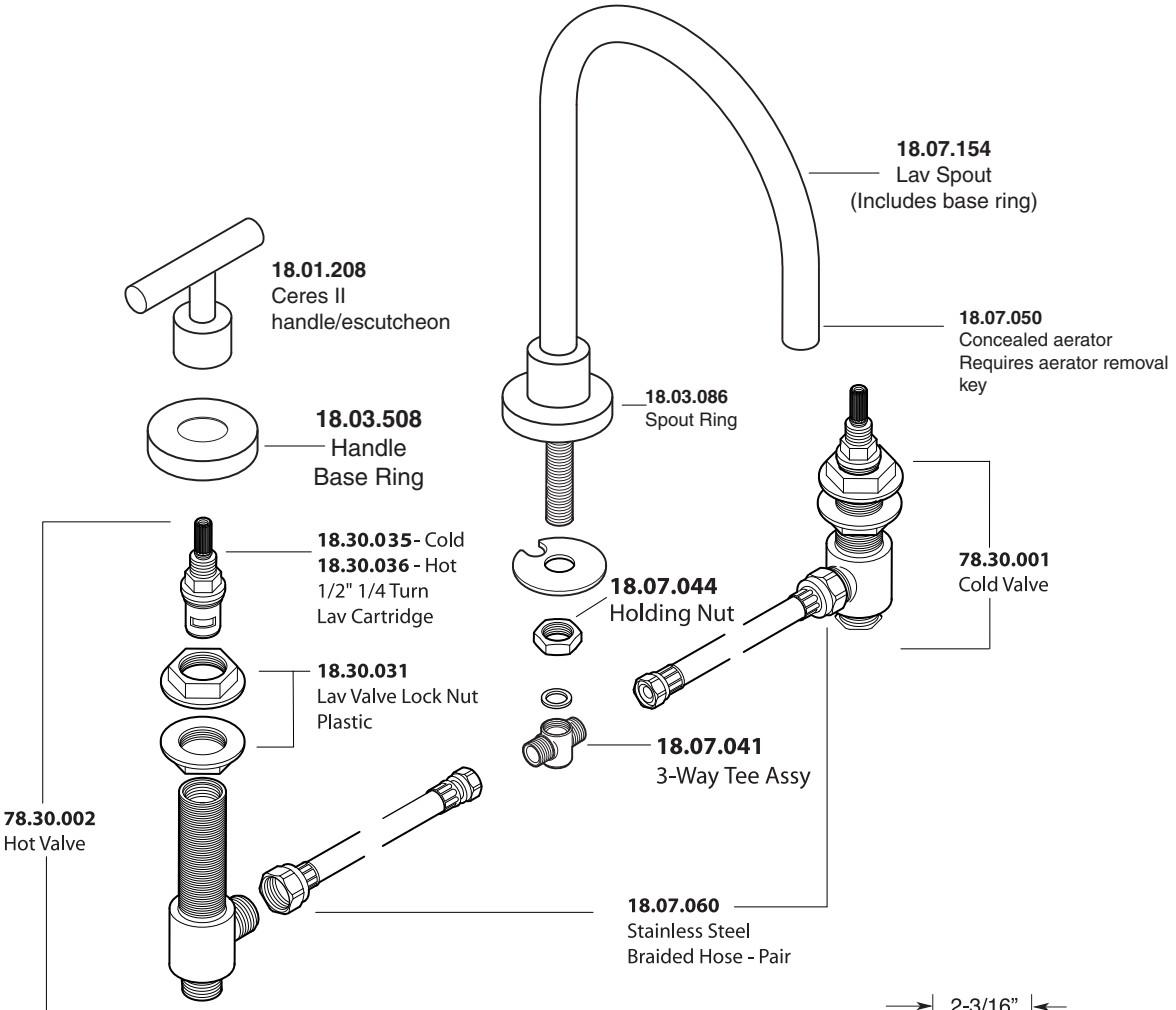

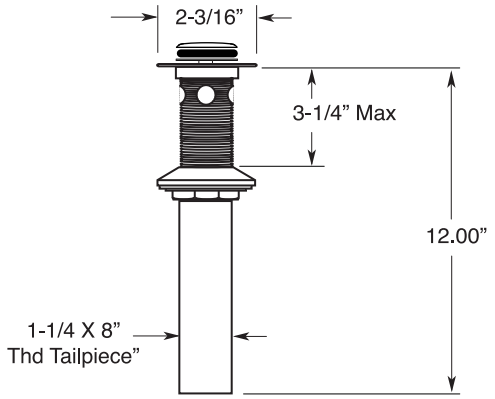

SOFT TOUCH
DRAIN ASSEMBLY
P/N 18.11.052