SIGMA
PRECISION CRAFTED

PARTS LIST

620 Series Lavatory Set with Moderne X Handles

1.629408

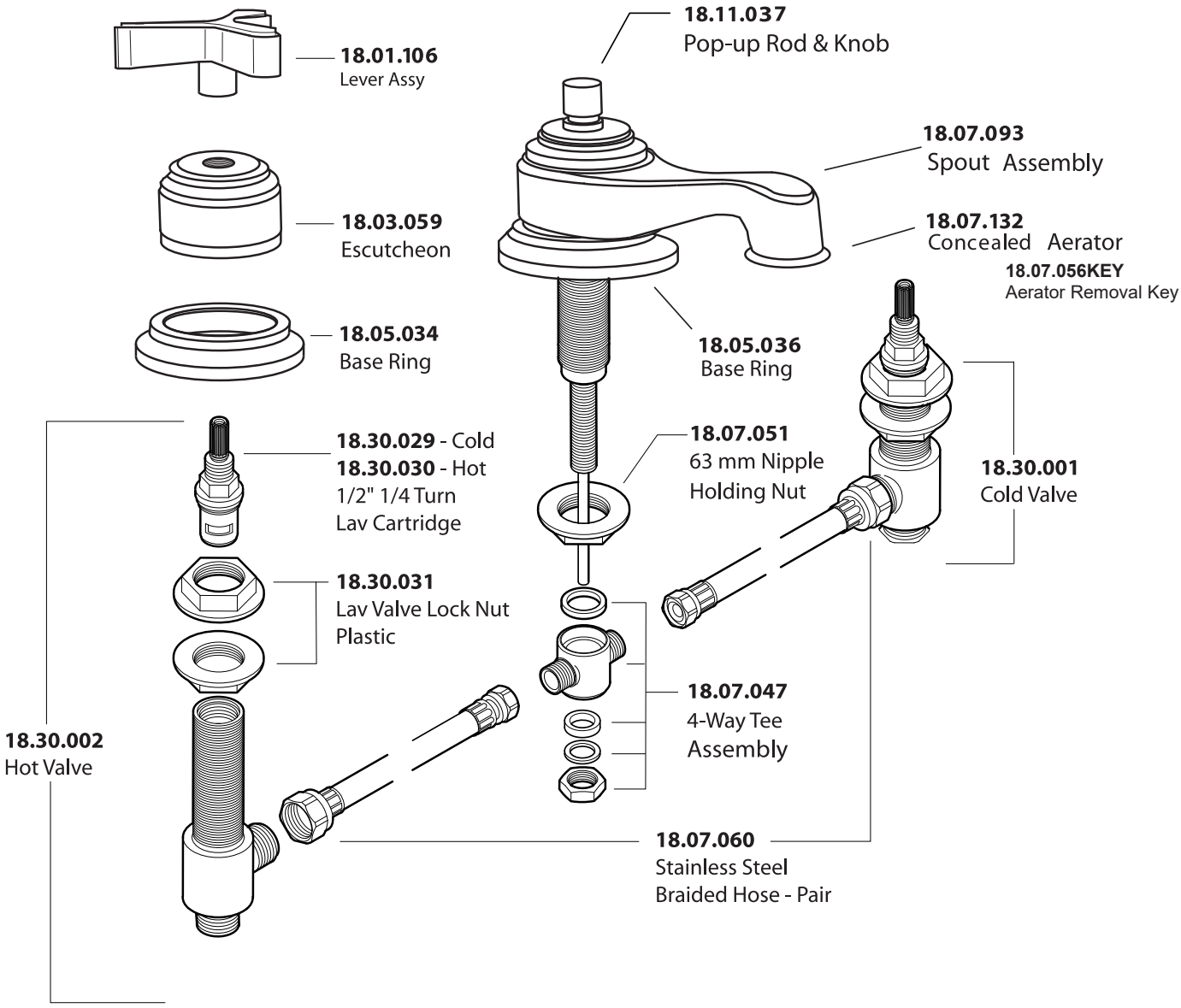

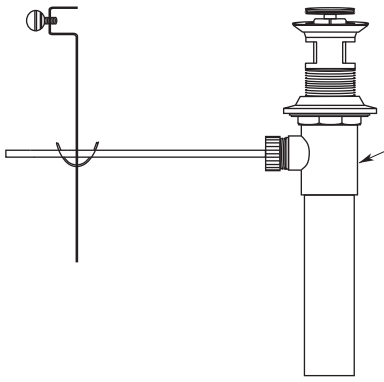

18.11.041
Pop-Up Drain
Assembly (Finish)
With Standard 6" Horizontal
Ball Rod *

***APS.11.019**
Available Extended
14" Horizontal Ball Rod

American Faucet & Coatings Corporation.

Tel: 760-598-5895, Toll Free Fax 800-621-8383, customerservice@sigmafaucet.com