SIGMA
PRECISION CRAFTED

Parts List

Series 620

Moderne X
Roman Tub Set

1.629477

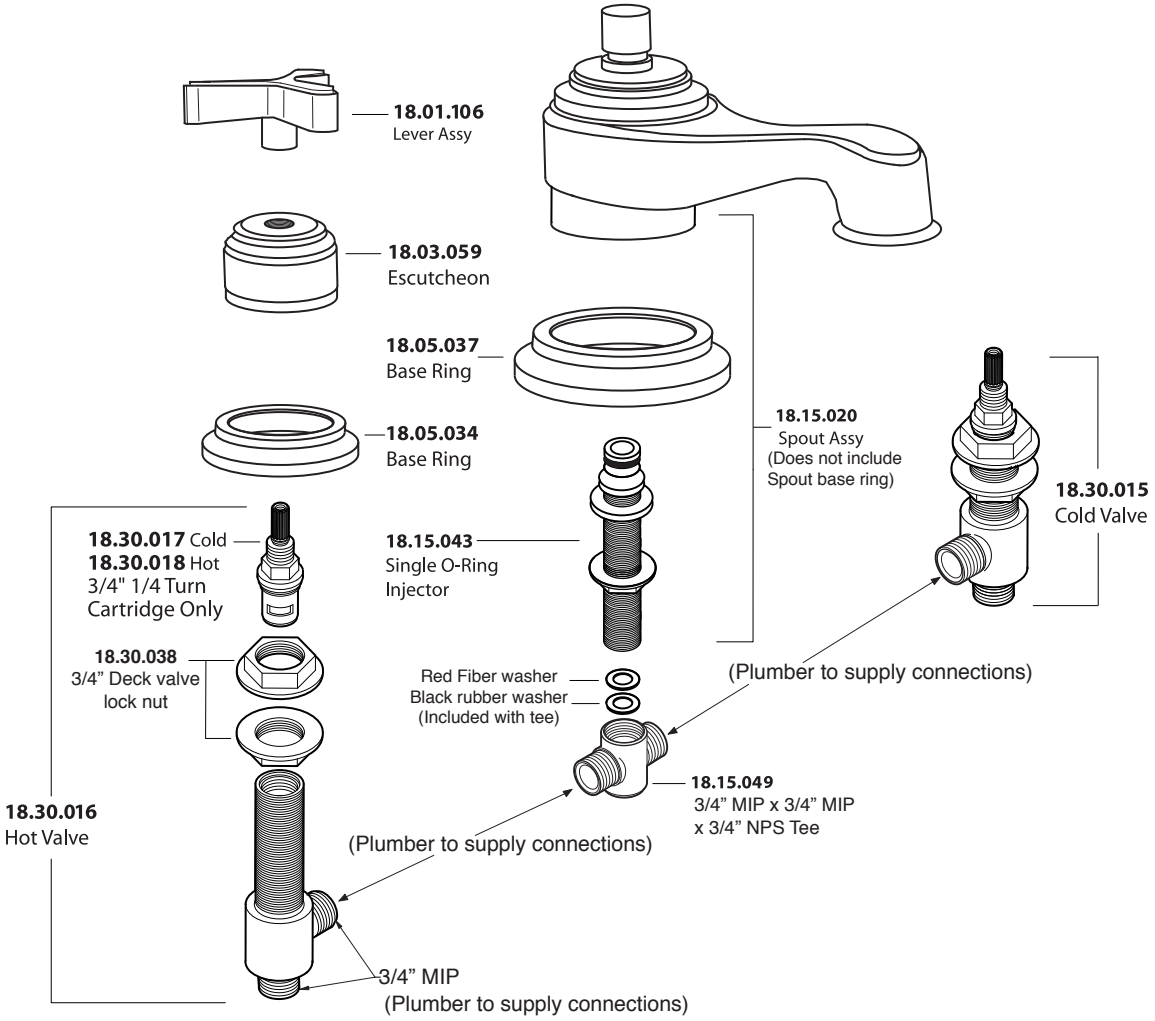

American Faucet & Coatings Corporation.

Tel: 760-598-5895, Toll Free Fax 800-621-8383, customerservice@sigmafaucet.com