RESERVE Collection

TechData

SPECIFICATIONS

Cote d'Or

Deluxe Slidebar Assembly
with (026) Finial Lever

78.026.121

FEATURES:

- All brass construction
- Available in all finishes. Warranty varies according to finish selection.
- Mounting hardware is included.

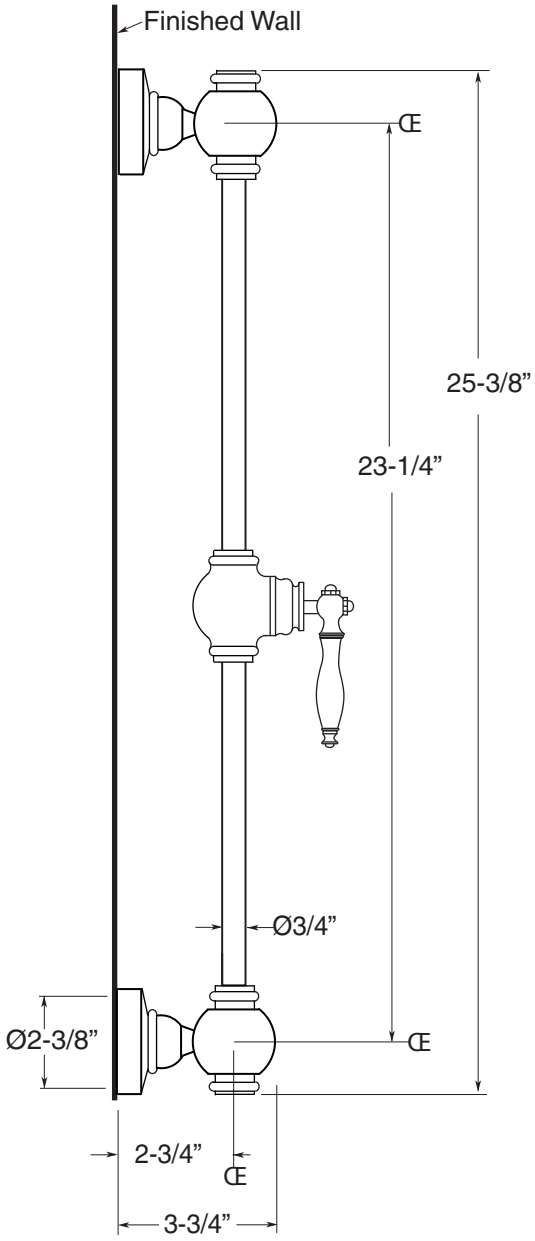

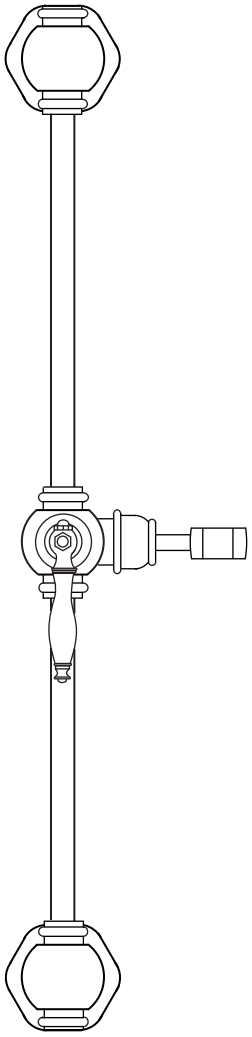

Note: Measurements are subject to change or cancellation. No responsibility is assumed for use of superseded or voided pages.