RESERVE Collection

TechData

Specifications

St. Julien

Roman Tub with Deckmount
Handshower and Transfer Valve
7.5446393
(7.5446393T - Trim Only)

FEATURES:

- All brass construction.
- 3/4” valve bodies with 1/4-turn ceramic disc cartridge.
- Optional 3/4” wall spout available: P/N: 78.17.002
- Optional 3/4” arched tub spout available: P/N 78.17.001
- Available in all finishes. Warranty varies according to finish selection.
- Certified to meet and exceed the following codes and standards: ASME A112.18.1-2005/CSAB 125.1-2005

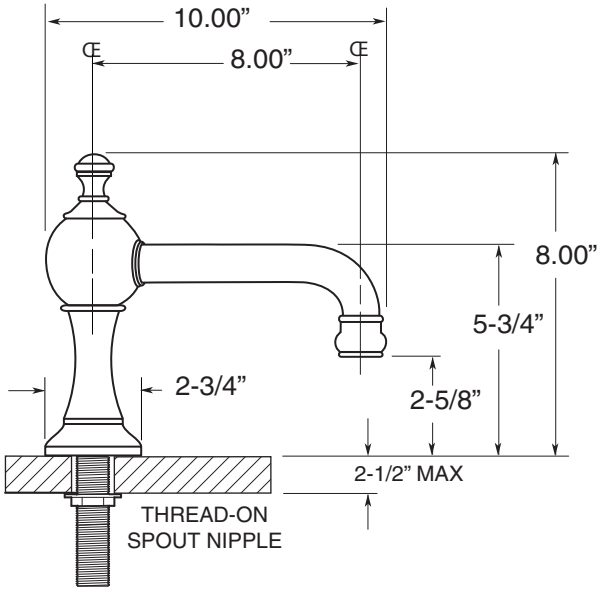

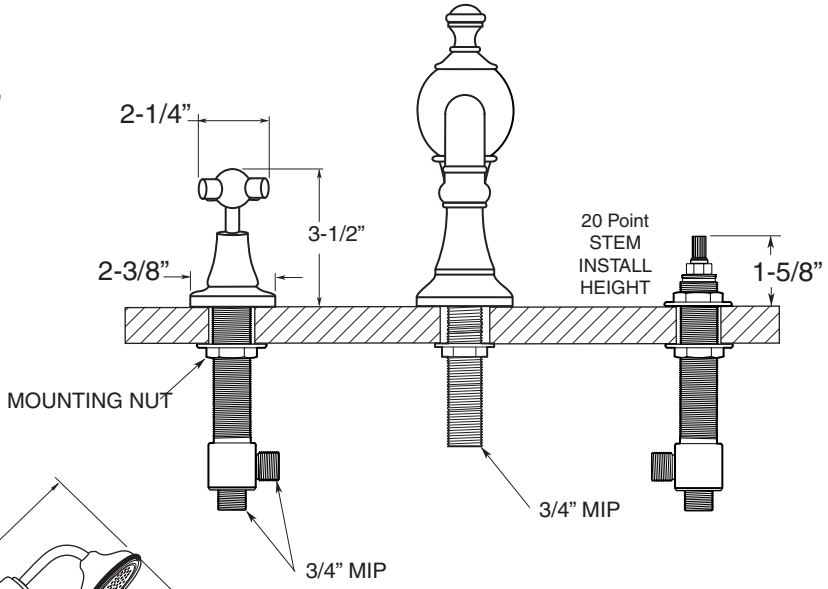

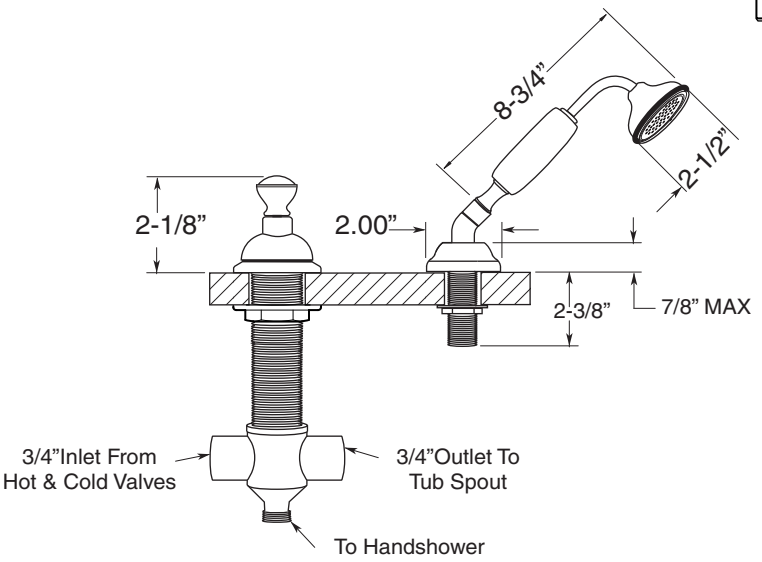

NOTE: Spout and valves install through 1-1/4” diameter holes.
Plumber to provide 3/4” supply lines to valves

NOTE: 60” chrome spiral hose (18.10.016) - INCLUDED

Note: Measurements are subject to change or cancellation. No responsibility is assumed for use of superseded or voided pages.