RESERVE Collection

Parts List

Cote d'Or

Imperial Deluxe 3/4" Thermostatic with Integral Stops 7.0302697D

NOTE: Separate shut-off's required to operate system.

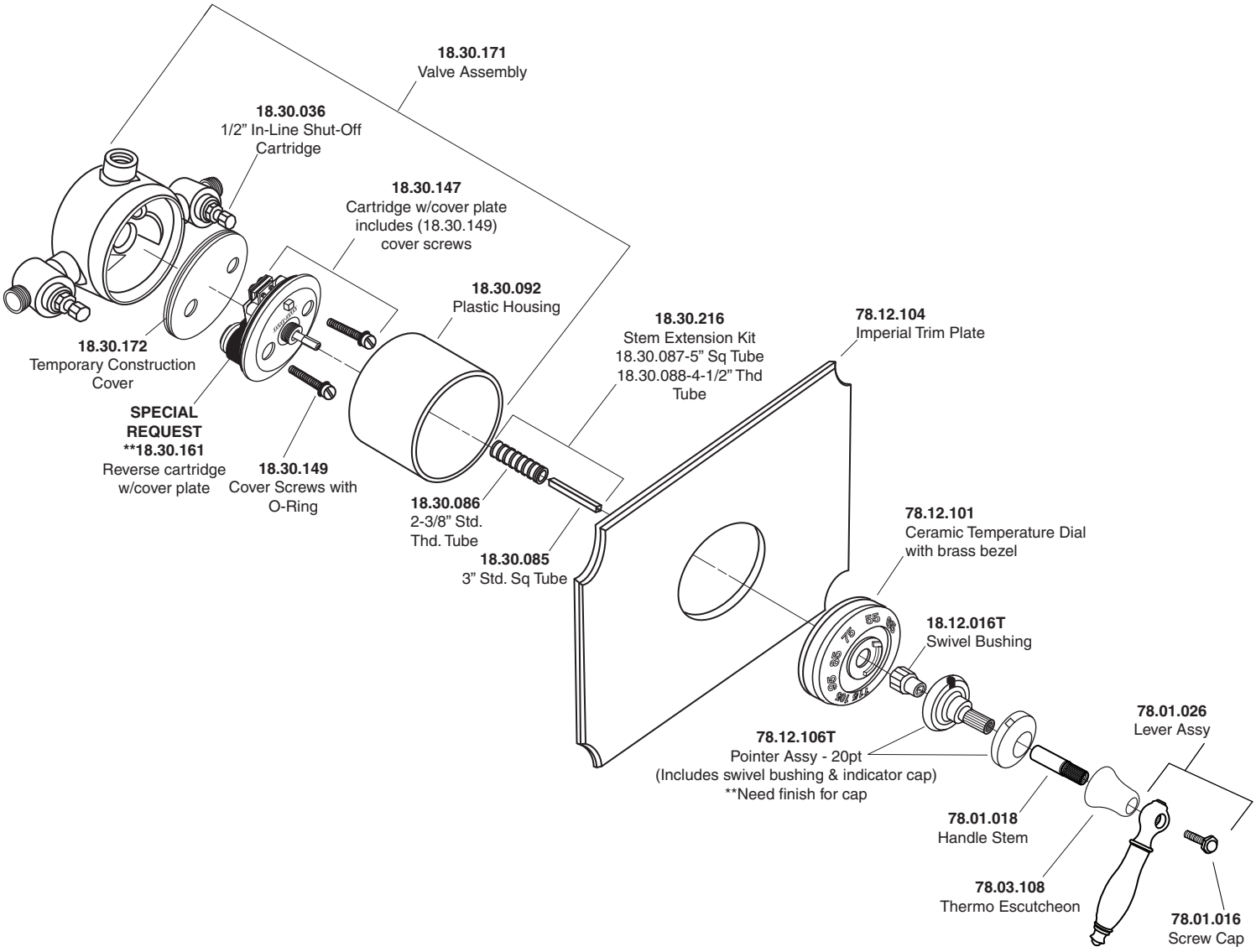

American Faucet & Coatings Corporation.

Tel: 760-598-5895, Toll Free Fax 800-621-8383, customerservice@sigmafaucet.com