Parts List

Margaux

Imperial Deluxe 3/4” Thermostatic with Integral Stops

7.0315897D
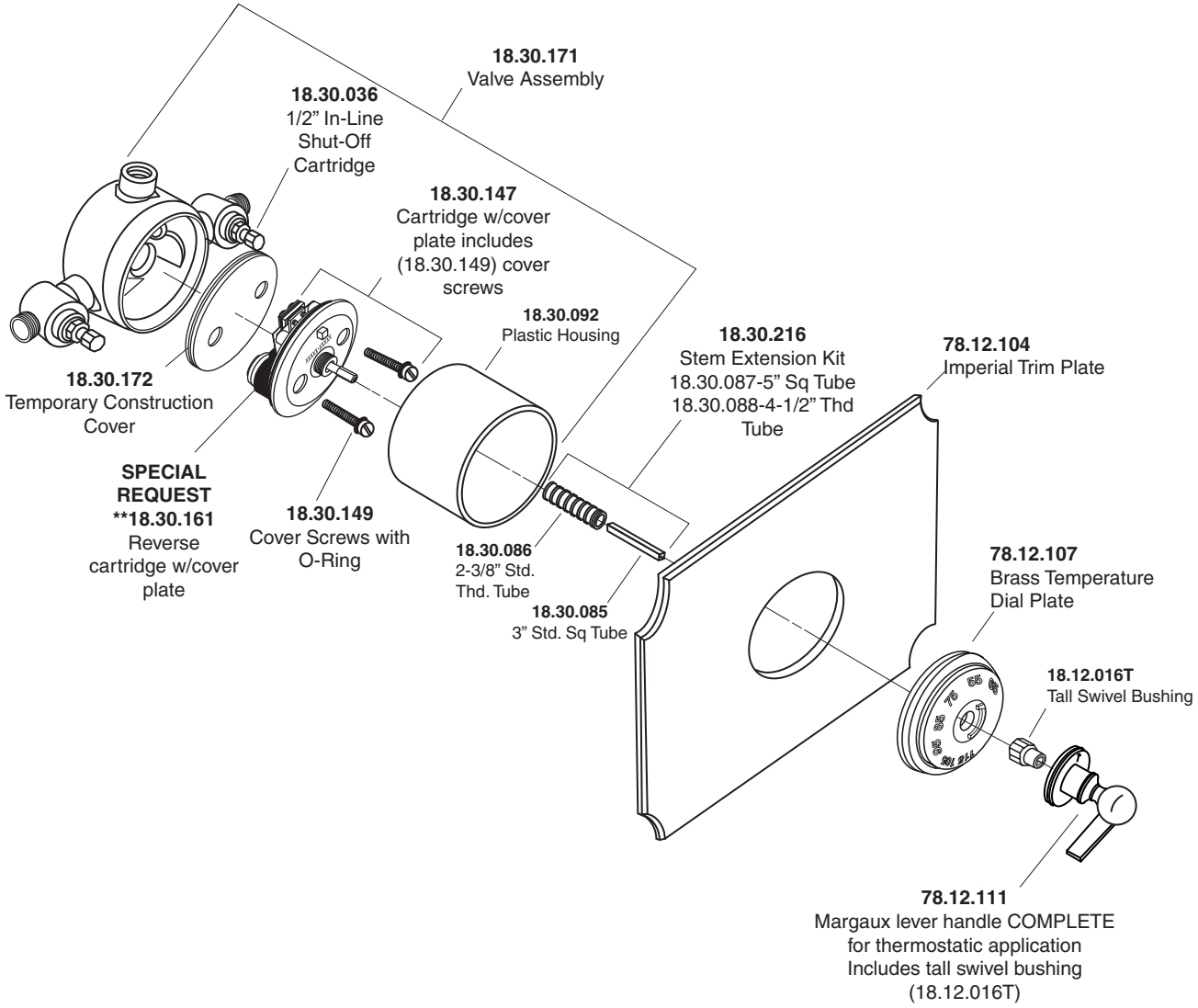
NOTE: Separate shut-off’s required to operate system.