Parts List

Rutherford

3/4” Thermostatic with Integral Stops

7.0448297D

NOTE: Separate shut-off’s required to operate system.

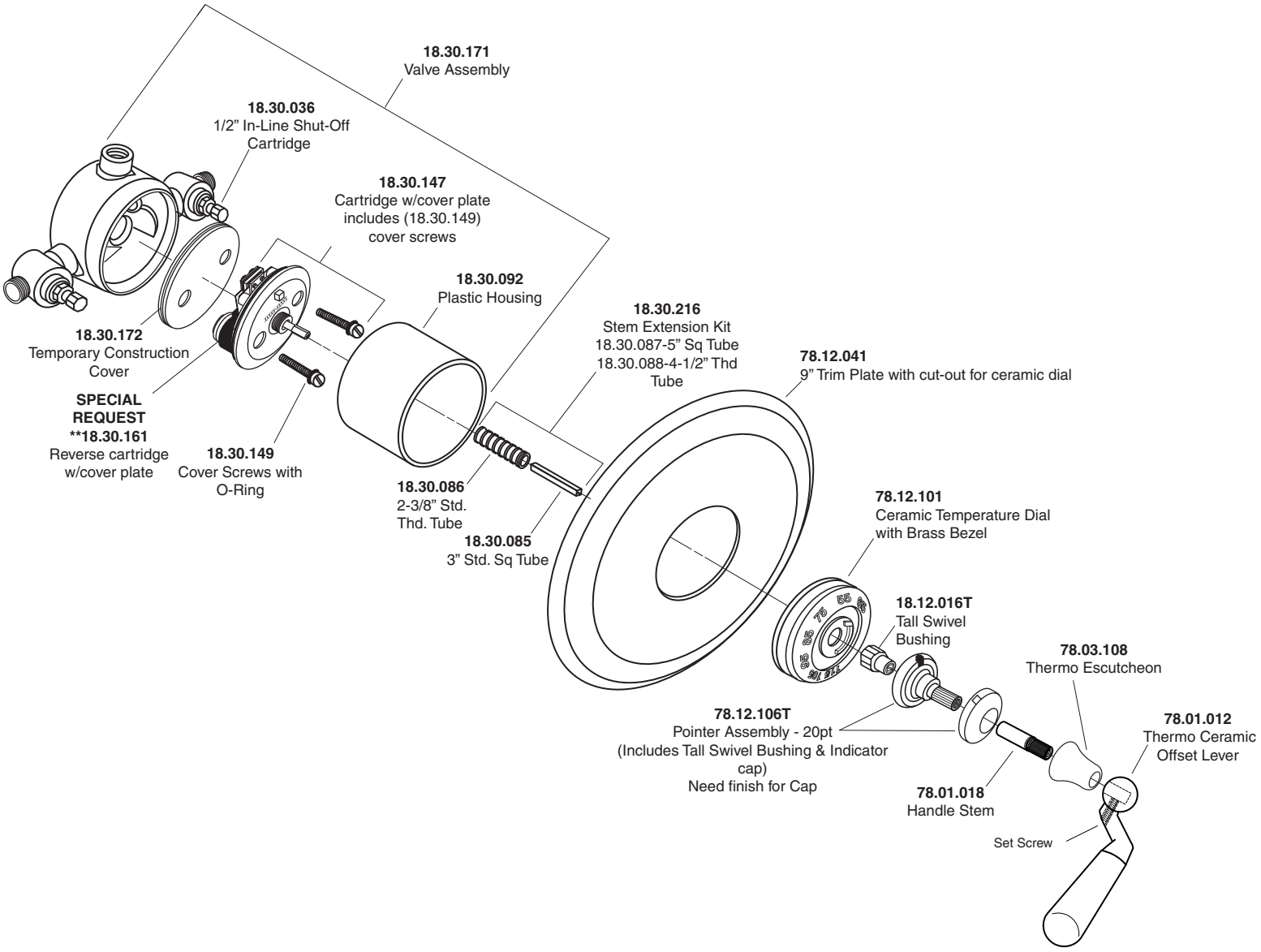

Tel: 760-598-5895, Toll Free Fax 800-621-8383, customerservice@sigmafaucet.com