RESERVE Collection

Parts List

Rutherford

Vessel Lavatory Set

7.5548607

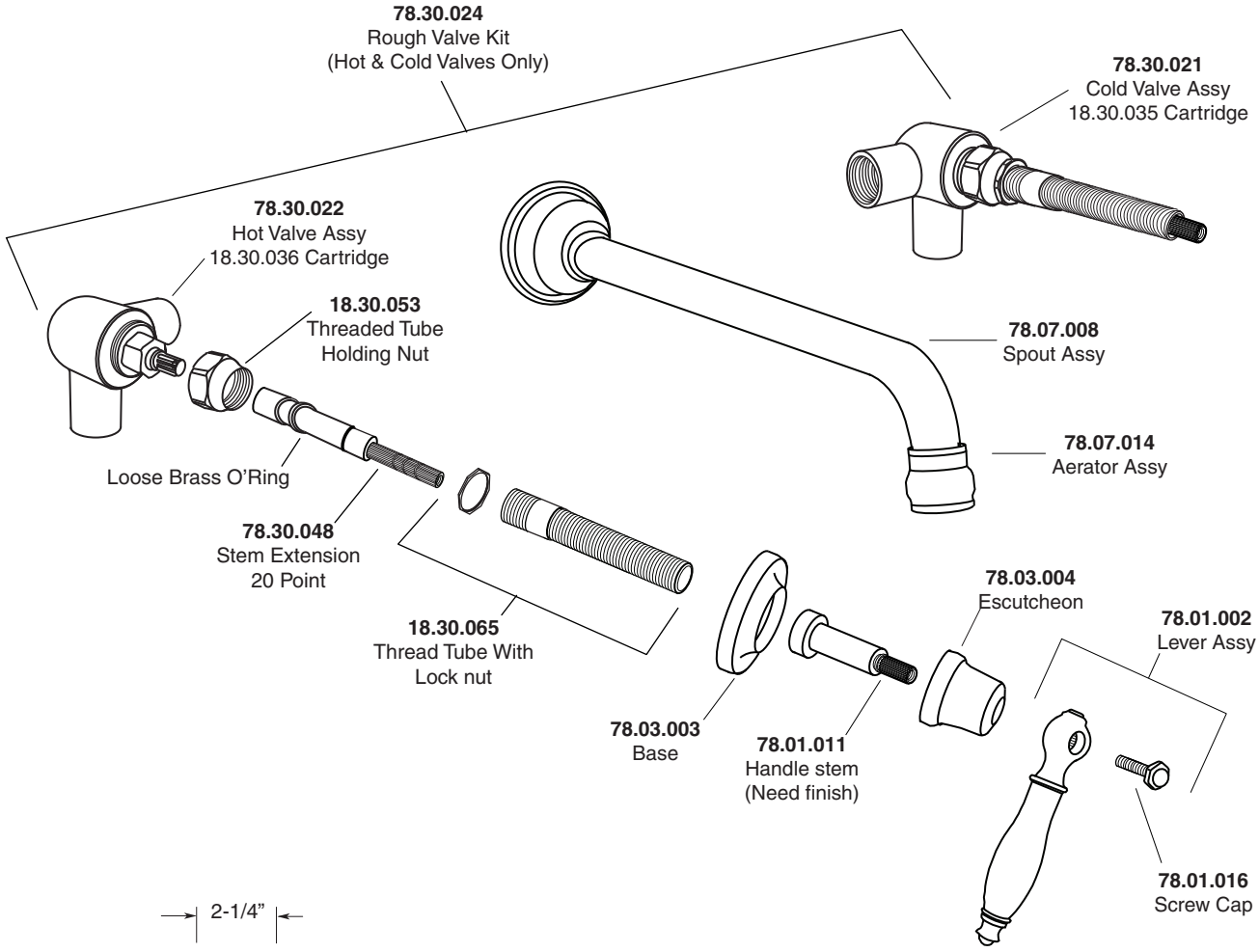

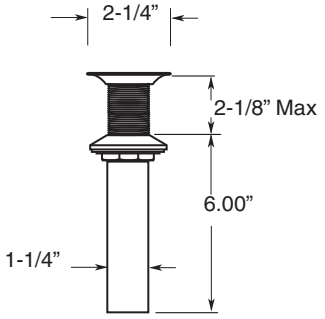

GRID DRAIN ASSEMBLY
NO OVERFLOW

Note: Measurements are subject to change or cancellation. No responsibility is assumed for use of superseded or voided pages.