RESERVE Collection

Parts List

Cote d'Or

Vessel Lavatory Set

7.5602107

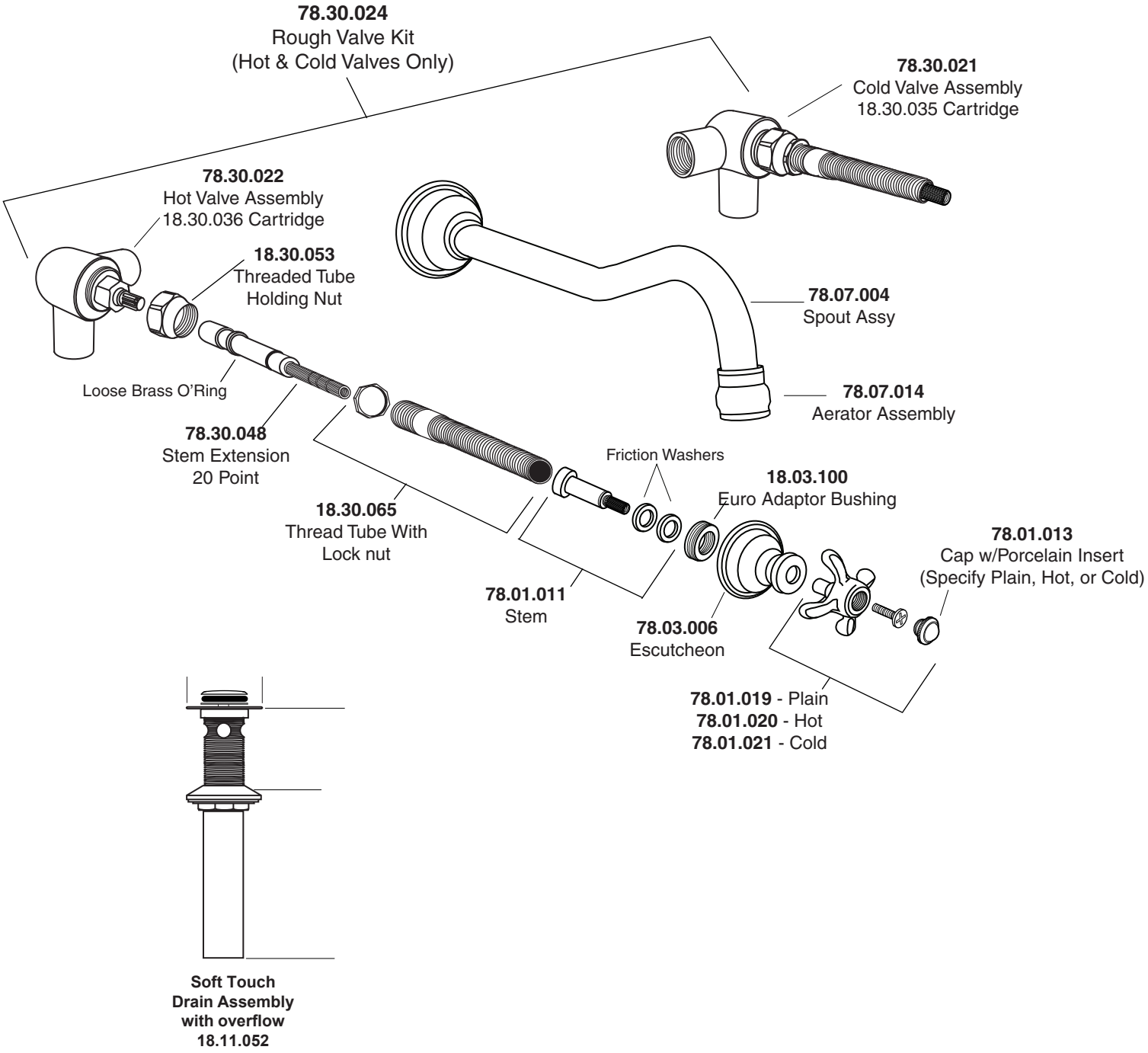

Note: Measurements are subject to change or cancellation. No responsibility is assumed for use of superseded or voided pages.