RESERVE Collection

Parts List

Cote d'Or

Vessel Lavatory Set

7.5602507

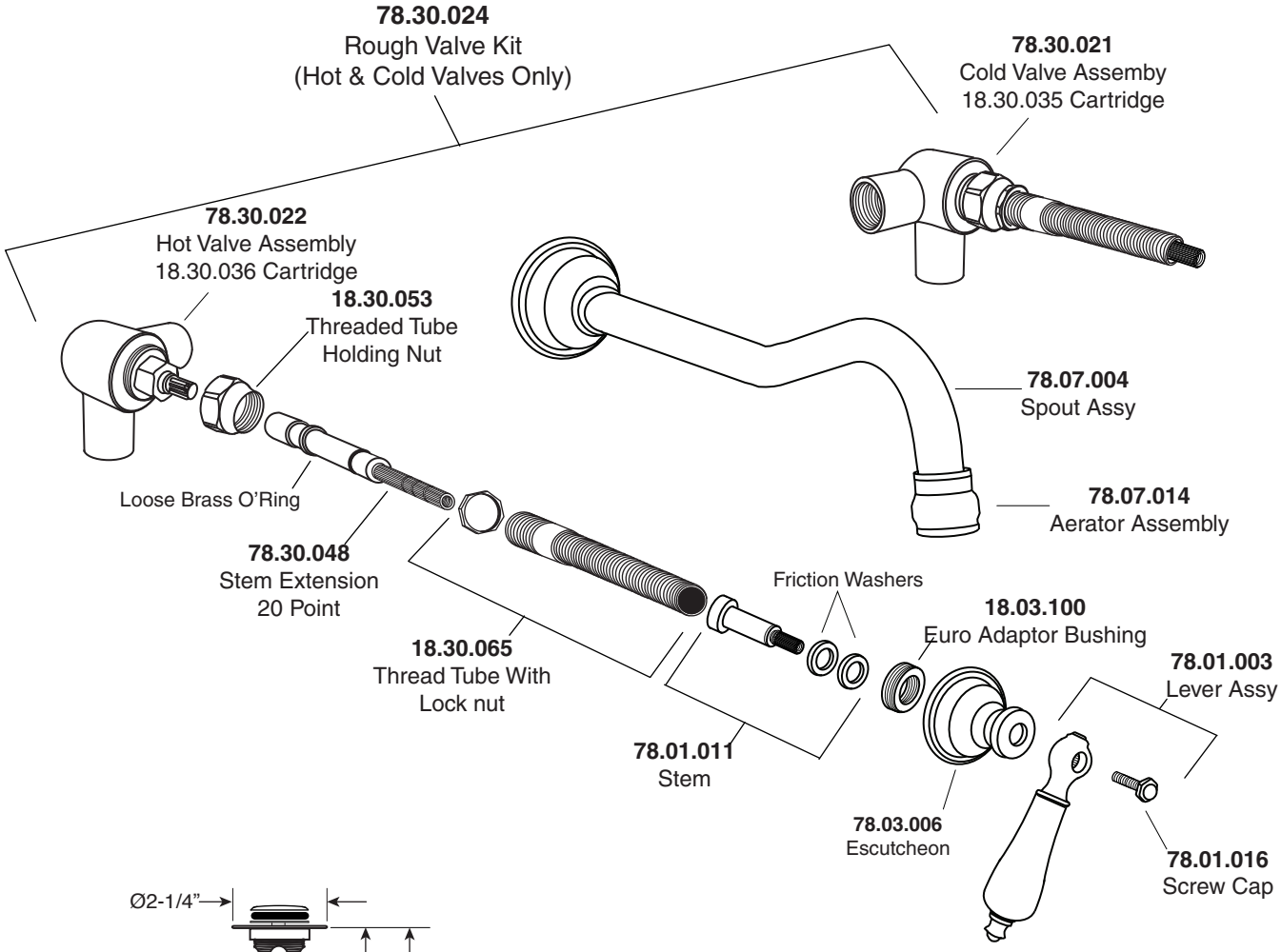

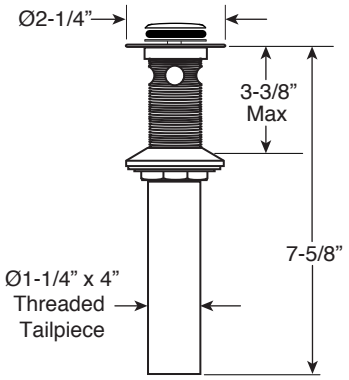

Soft Touch
Drain Assembly
with Overflow
18.11.052

Note: Measurements are subject to change or cancellation. No responsibility is assumed for use of superseded or voided pages.