RESERVE Collection

# Parts List

# Cote d'Or

## Vessel Lavatory Set

## 7.5602607

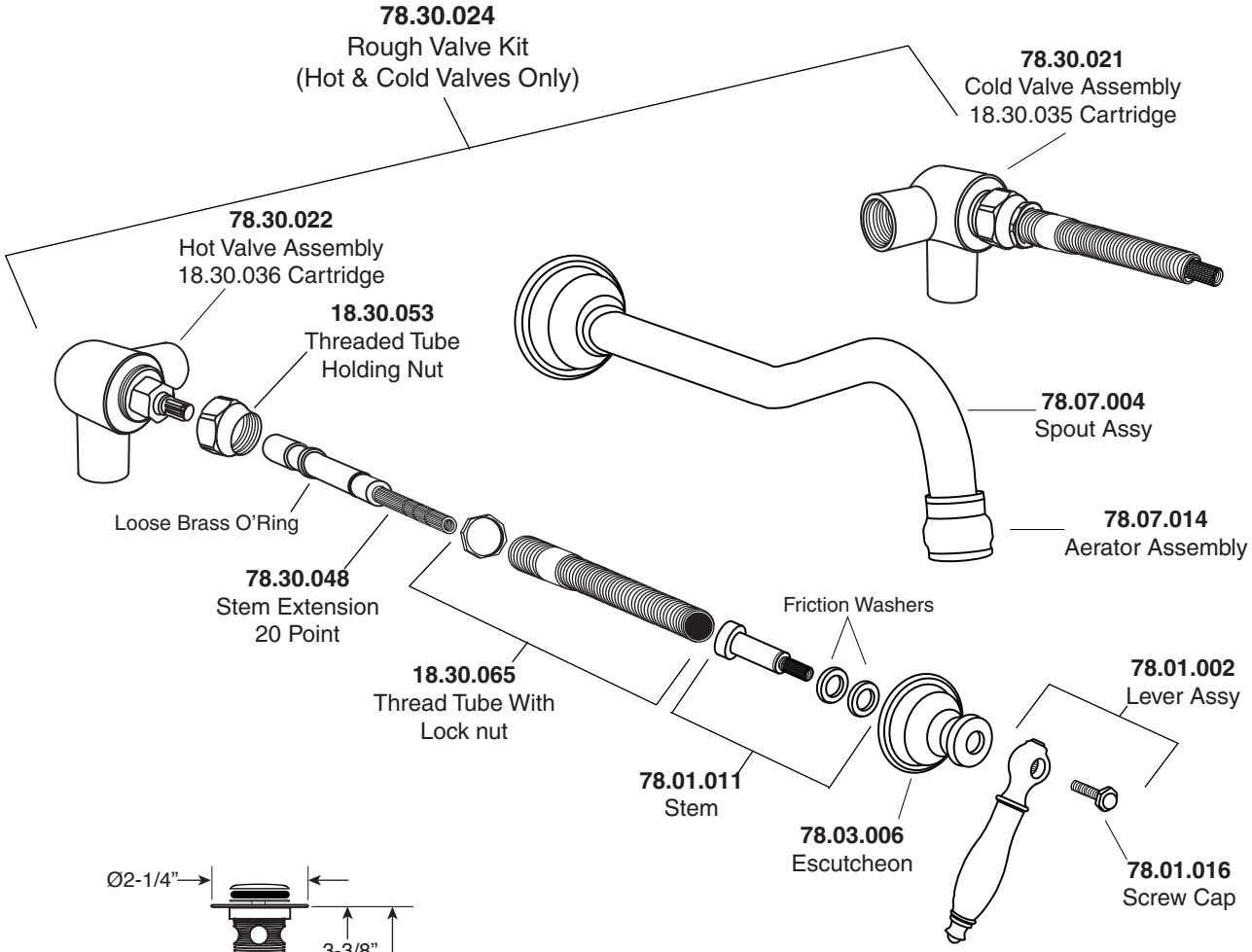


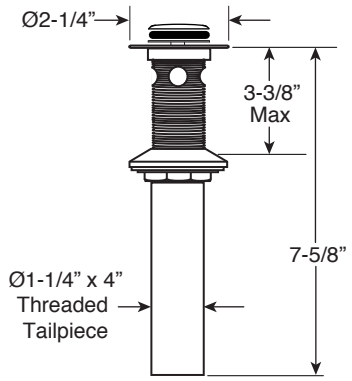


**Soft Touch**
**Drain Assembly**
**with Overflow**
**18.11.052**

Note: Measurements are subject to change or cancellation. No responsibility is assumed for use of superseded or voided pages.