SIGMA Designer Faucetry

TechData

SPECIFICATIONS

Trim for Wall Valve

Trim Only

Madison Elite

1.004087T

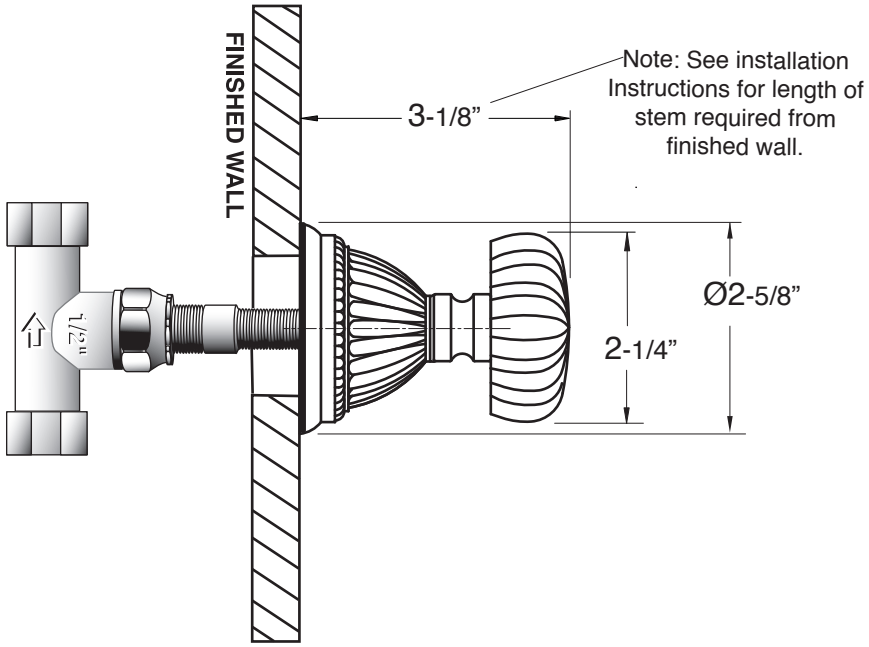

Trim used with the following Valves:

18.30.020 - 1/2” Volume Control - 16 pt.....Replacement cartridge: 18.30.036

18.30.023 - 3/4” Volume Control - 16 pt.....Replacement cartridge: 18.30.011

18.30.255 - 3 port In-wall Diverter - 16 pt.....Replacement cartridge: 18.30.259

18.30.253 - 4 port In-wall Diverter - 16 pt.....Replacement cartridge: 18.30.257

78.30.020 - 1/2” Volume Control - 20 pt.....Replacement cartridge: 18.30.036

78.30.023 - 1/2” Volume Control - 20 pt.....Replacement cartridge: 18.30.011

78.30.255 - 3 port In-wall Diverter - 20 pt.....Replacement cartridge: 18.30.259

78.30.253 - 4 port In-wall Diverter - 20 pt.....Replacement cartridge: 18.30.257

Note: Measurements are subject to change or cancellation. No responsibility is assumed for use of superseded or voided pages.