SIGMA
PRECISION CRAFTED

PARTS LIST

2300 Series Single-Hole Lavatory Set with Stixx Handles

1.230018

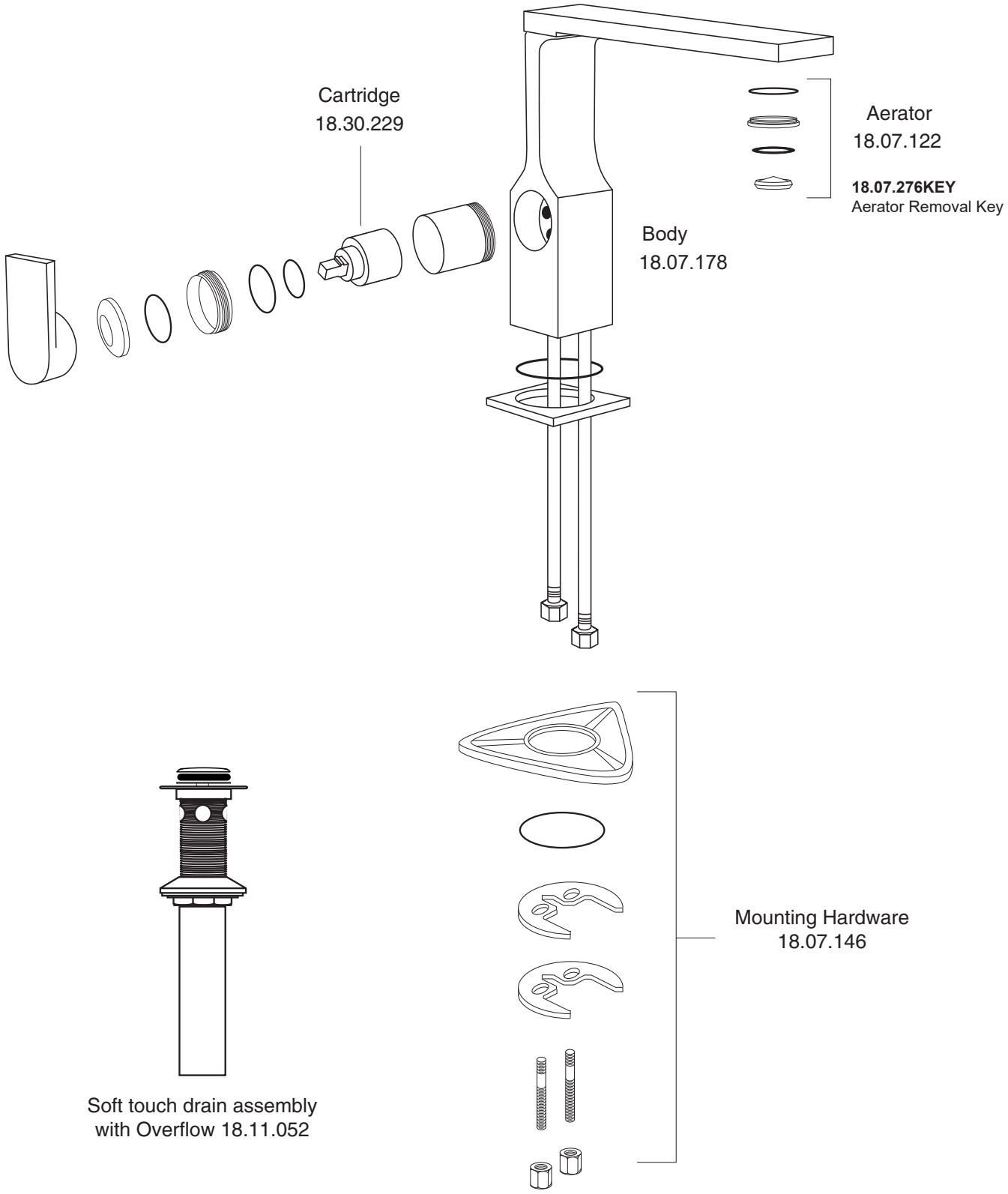

American Faucet & Coatings Corporation.

Tel: 760-598-5895, Toll Free Fax 800-621-8383, customerservice@sigmafaucet.com