SIGMA
PRECISION CRAFTED

PARTS LIST

310 Series Widespread Lavatory Set with Tribeca Handle

1.312908

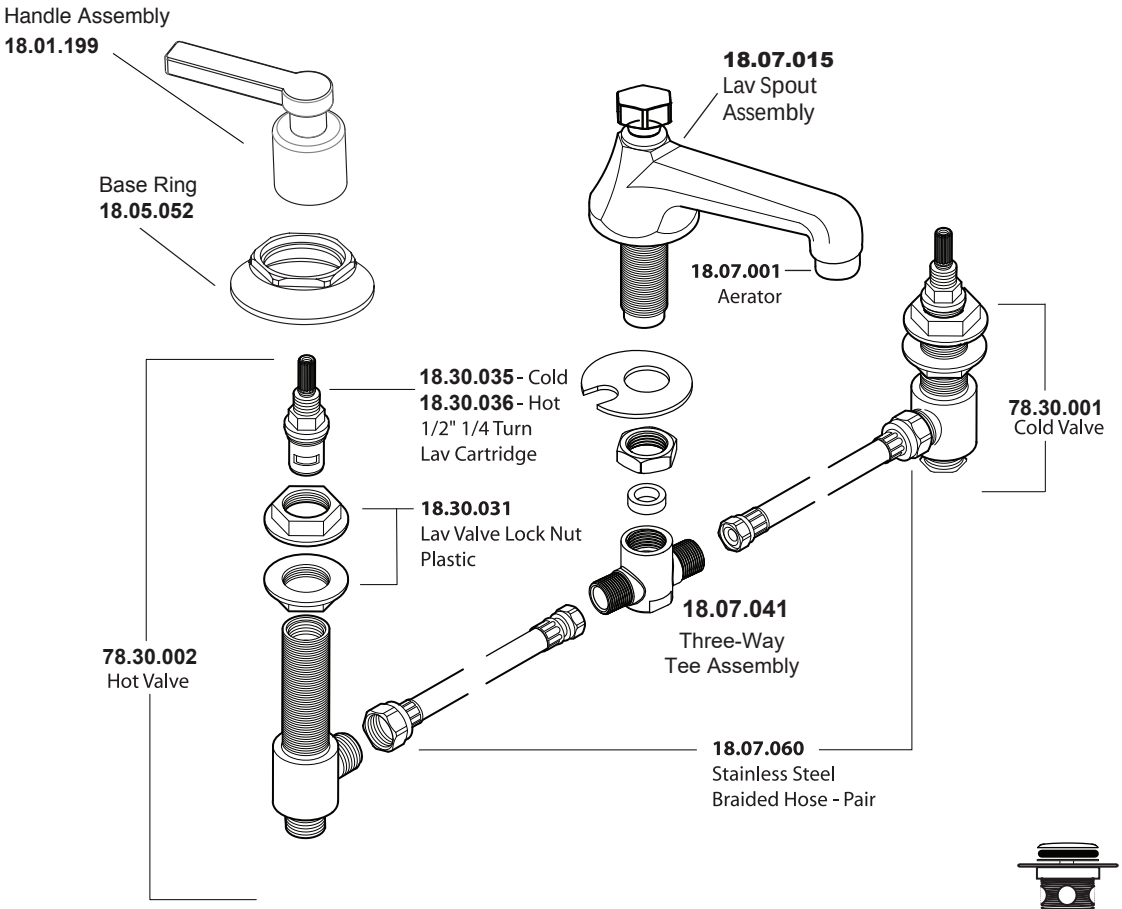

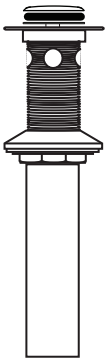

SOFT-TOUCH DRAIN
ASSEMBLY WITH OVERFLOW
18.11.052