SIGMA
PRECISION CRAFTED

PARTS LIST

310 Series Short Wall/Vessel Lavatory Set with Tribeca Handle

1.312907S

(1.312907ST - Trim Only)

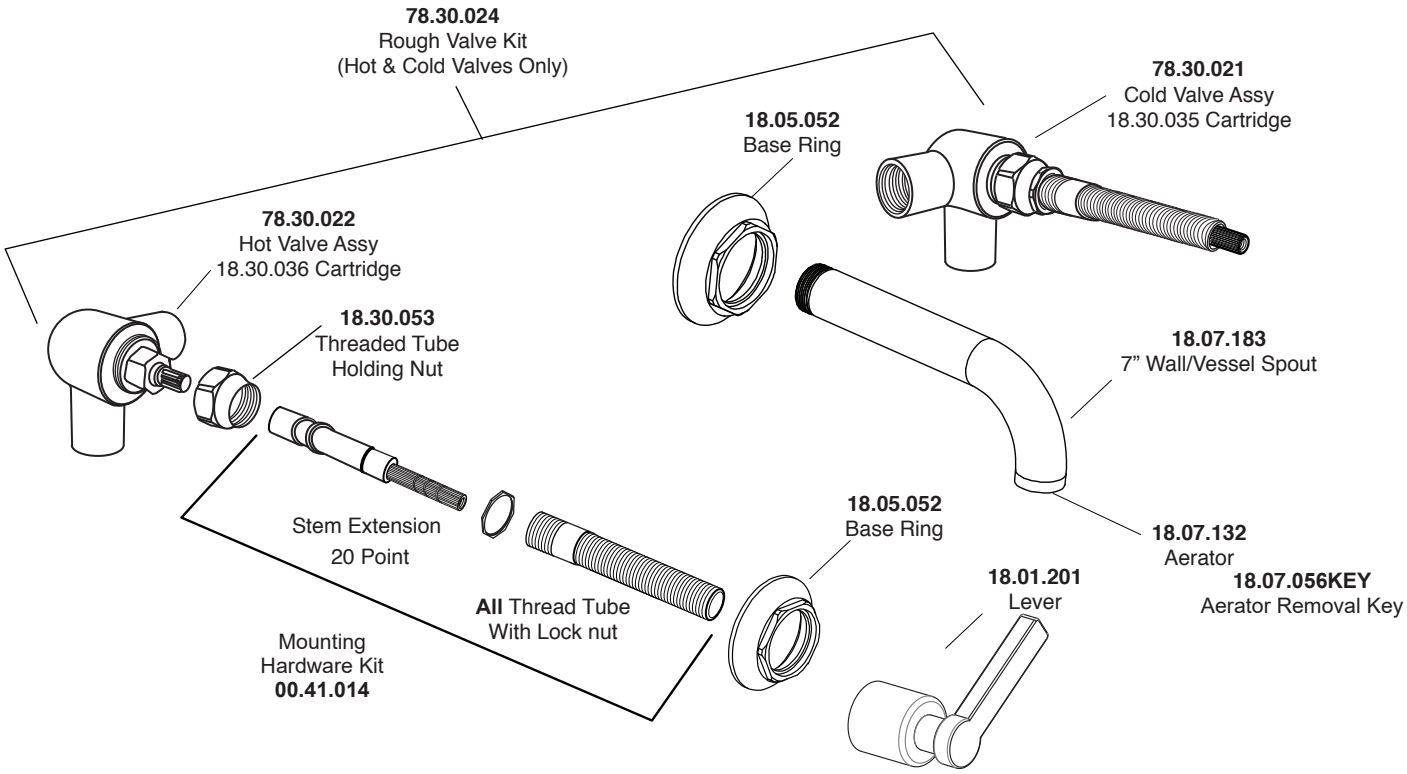

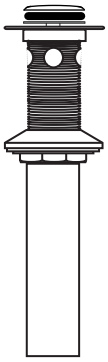

SOFT TOUCH
DRAIN ASSEMBLY
18.11.052

American Faucet & Coatings Corporation.

Tel: 760-598-5895, Toll Free Fax 800-621-8383, customerservice@sigmafaucet.com