SIGMA
PRECISION CRAFTED

PARTS LIST

310 Series Wall/Vessel Lavatory Set with Tribeca X Handle

1.313907

(1.313907T - Trim Only)

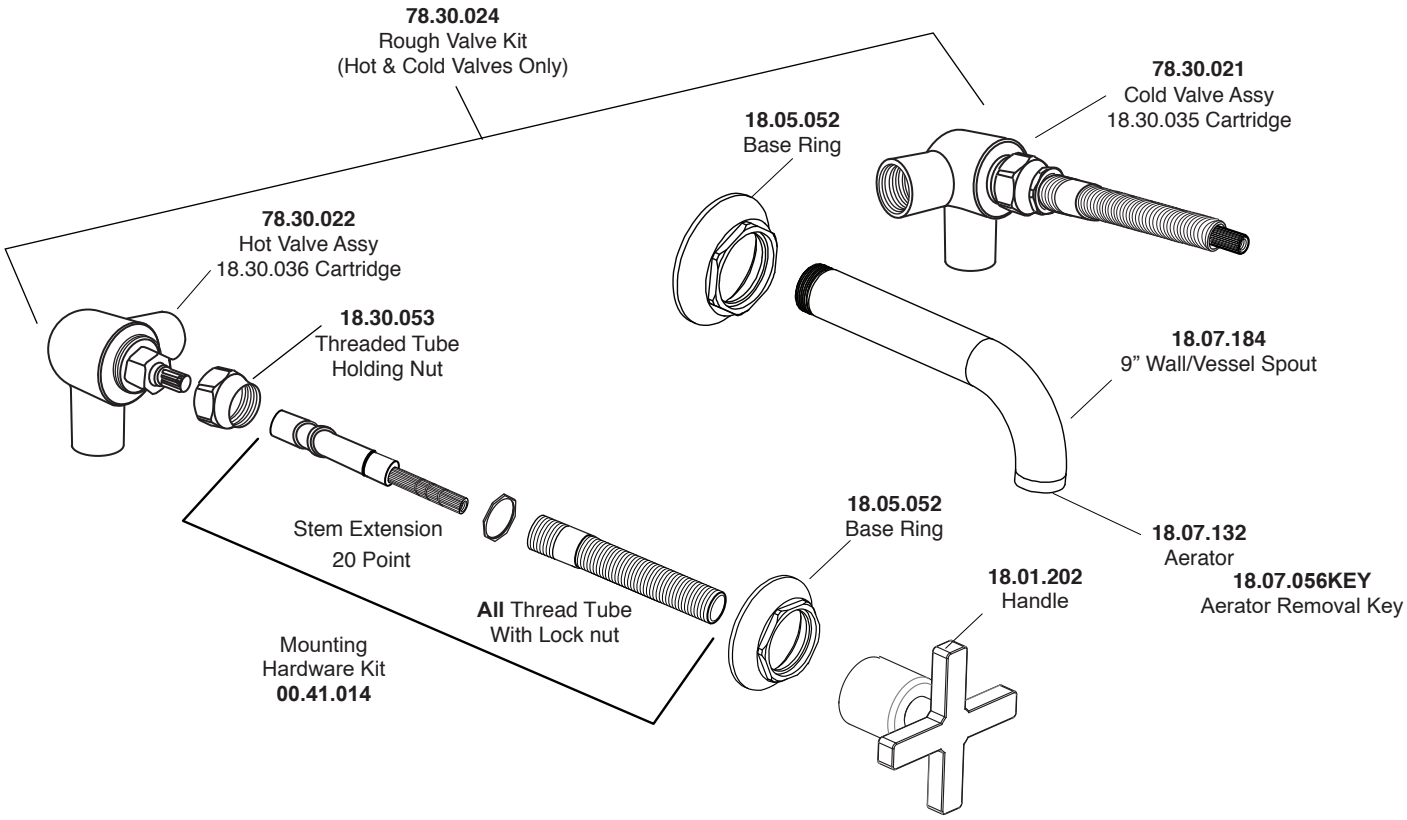

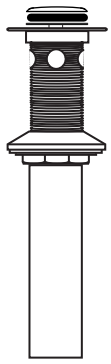

SOFT TOUCH
DRAIN ASSEMBLY
18.11.052