SIGMA
PRECISION CRAFTED

# PARTS LIST

## E-Mini Thermostatic Trim W/ Rectangular Plate and Nova II Handle

## 1.0S4851T

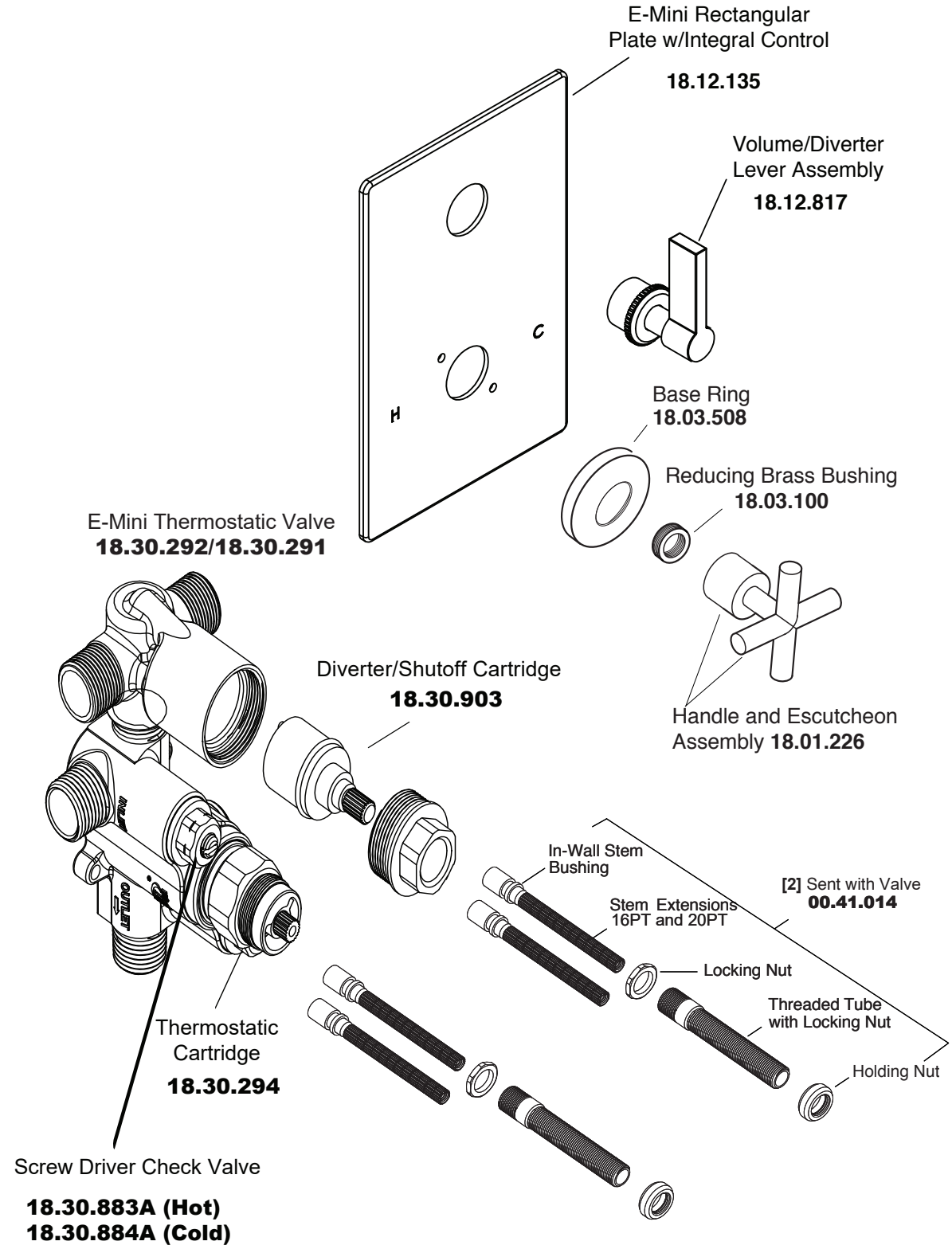


American Faucet & Coatings Corporation.

Tel: 760-598-5895, Toll Free Fax 800-621-8383, customerservice@sigmafaucet.com