SIGMA
PRECISION CRAFTED

Parts List

Series 400

Portofino
E-Mini Thermostatic Trim w/
Integral Control
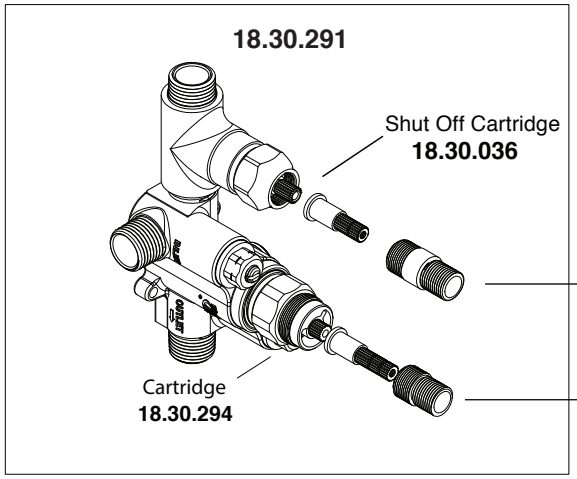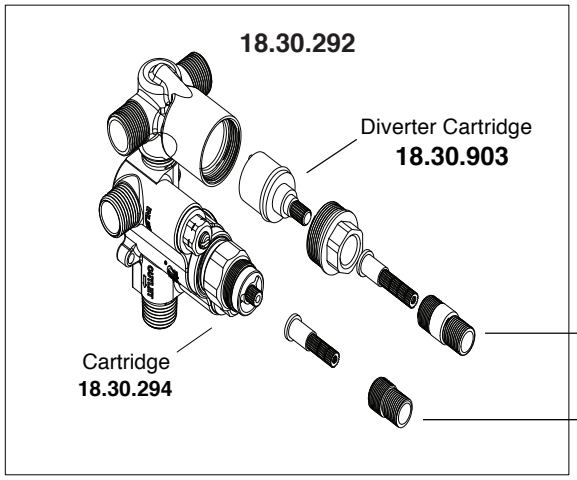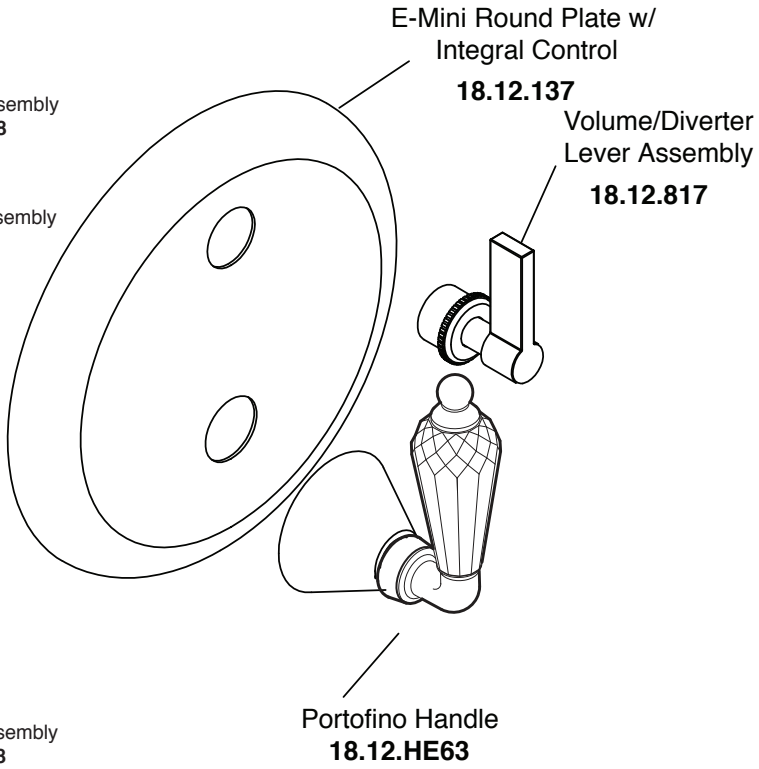
1.0R6351T