SIGMA
PRECISION CRAFTED

PARTS LIST

E-Mini Thermostatic Trim W/ Rectangular Plate and Moderne Handle

1.0S9351T

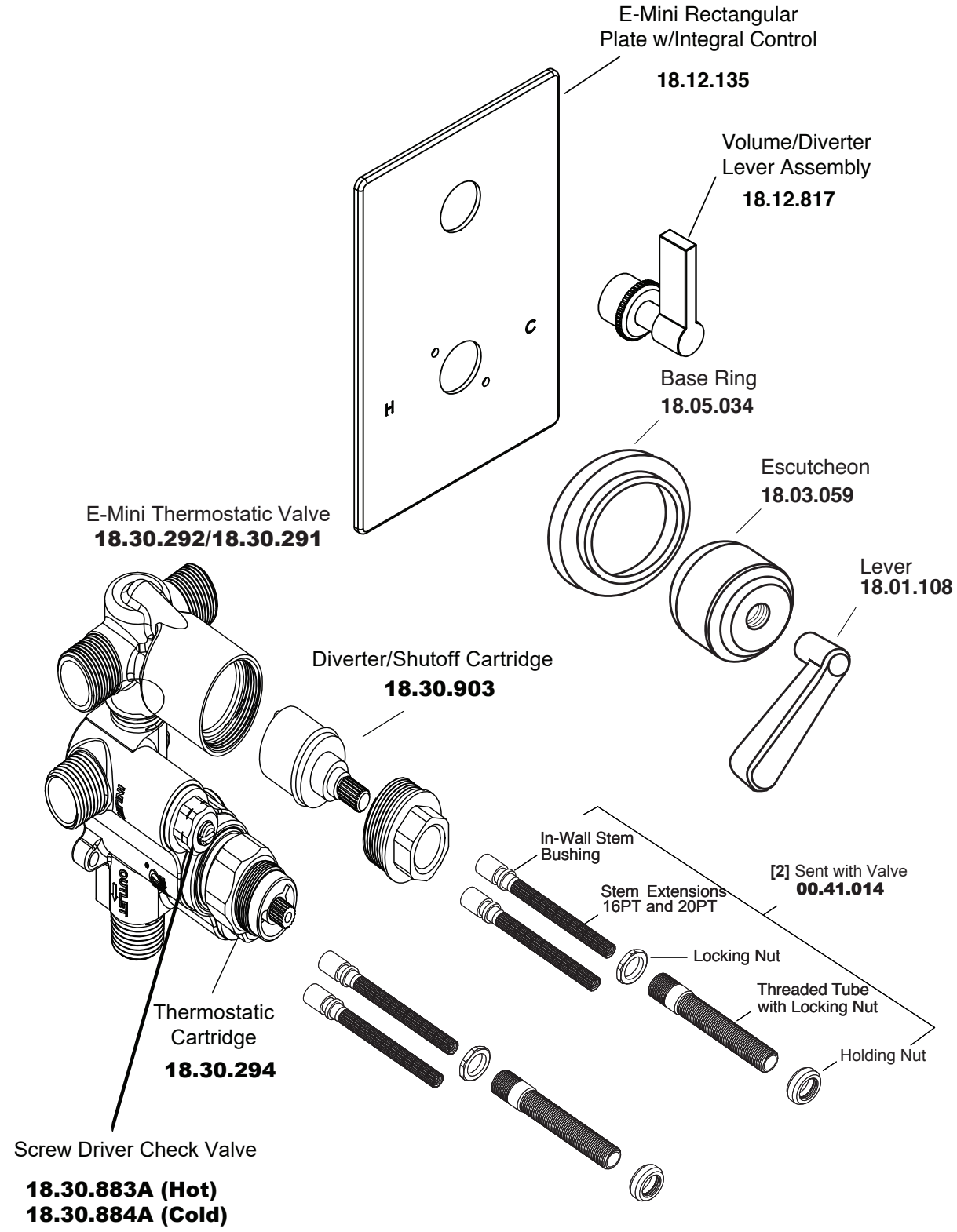

American Faucet & Coatings Corporation.

Tel: 760-598-5895, Toll Free Fax 800-621-8383, customerservice@sigmafaucet.com