SIGMA
PRECISION CRAFTED

PARTS LIST

E-Mini Thermostatic Trim W/ Rectangular Plate and Valencia Handle

1.0S7451T

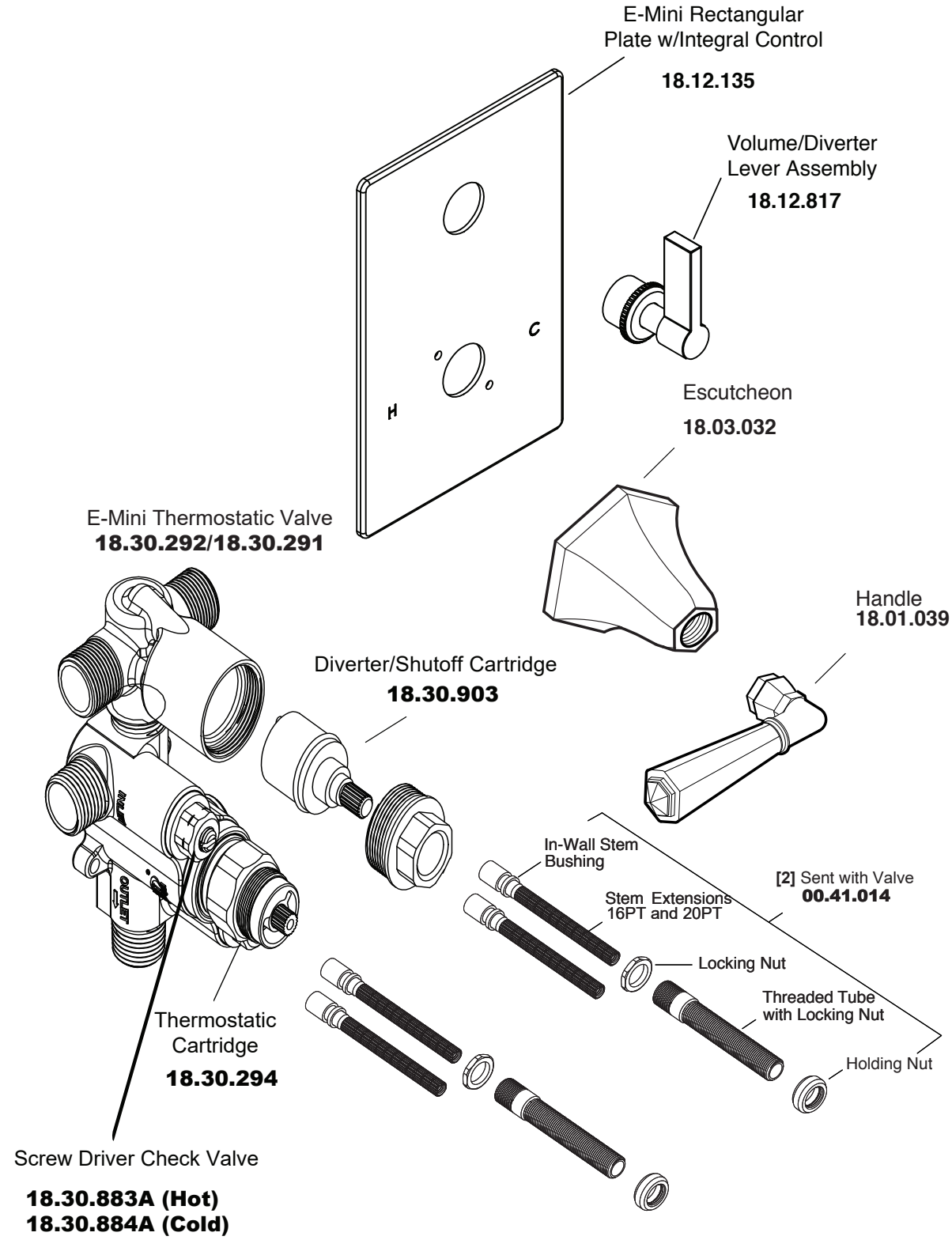

American Faucet & Coatings Corporation.
Tel: 760-598-5895, Toll Free Fax 800-621-8383, customerservice@sigmafaucet.com