SIGMA
PRECISION CRAFTED

Parts List

Series 1300

Windsor Elite
E-Mini Thermostatic Trim w/ Integral Control

1.0R3751T

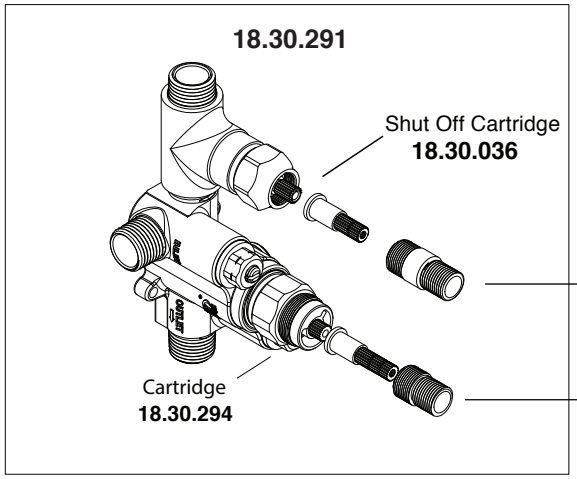

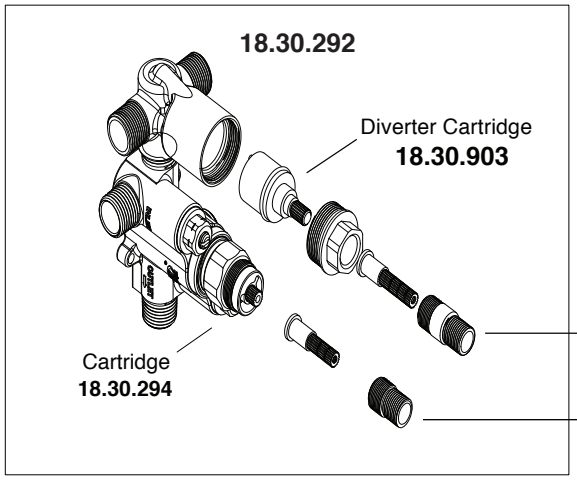

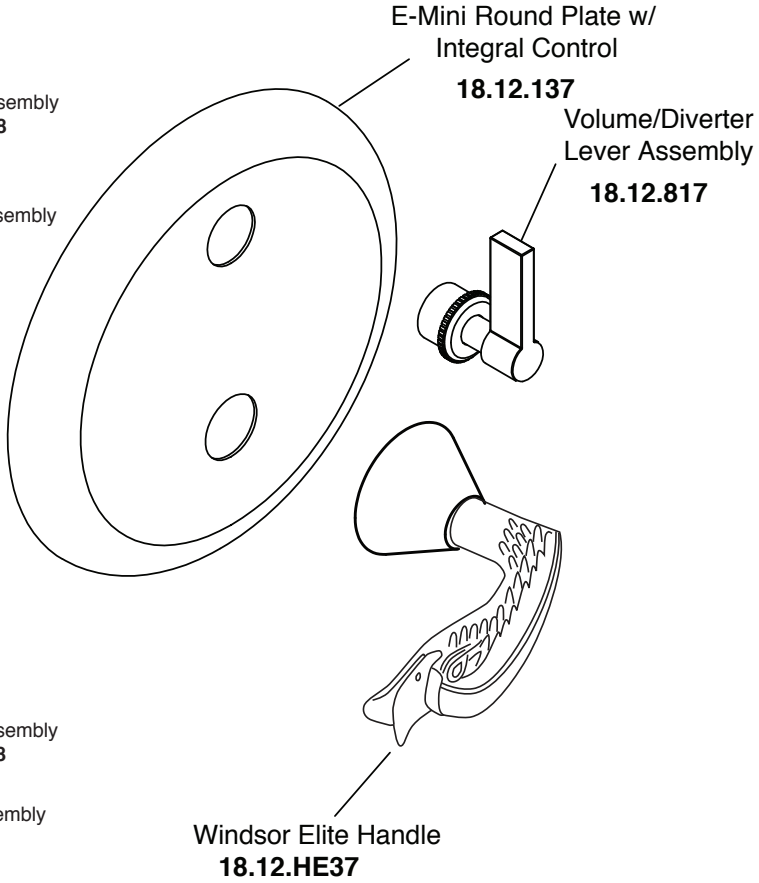

American Faucet & Coatings Corporation.

Tel: 760-598-5895, Toll Free Fax 800-621-8383, customerservice@sigmafaucet.com