SIGMA
PRECISION CRAFTED

PARTS LIST

E-Mini Thermostatic Trim W/ Rectangular Plate and Tremont Handle
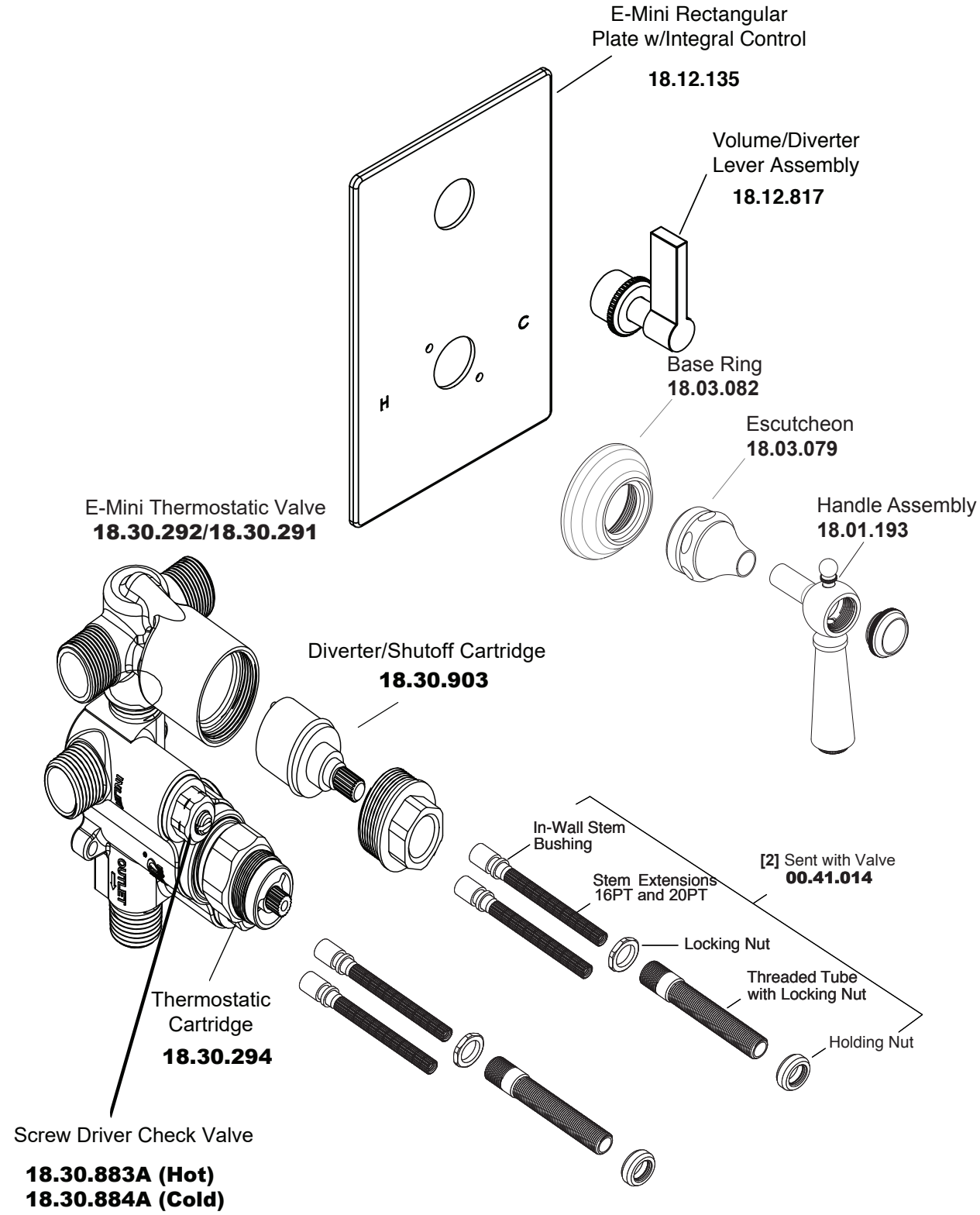
1.0S6151T