RESERVE Collection

TechData
Parts List

St Julien

Vessel Lavatory Set
Finial Lever
7.5446607

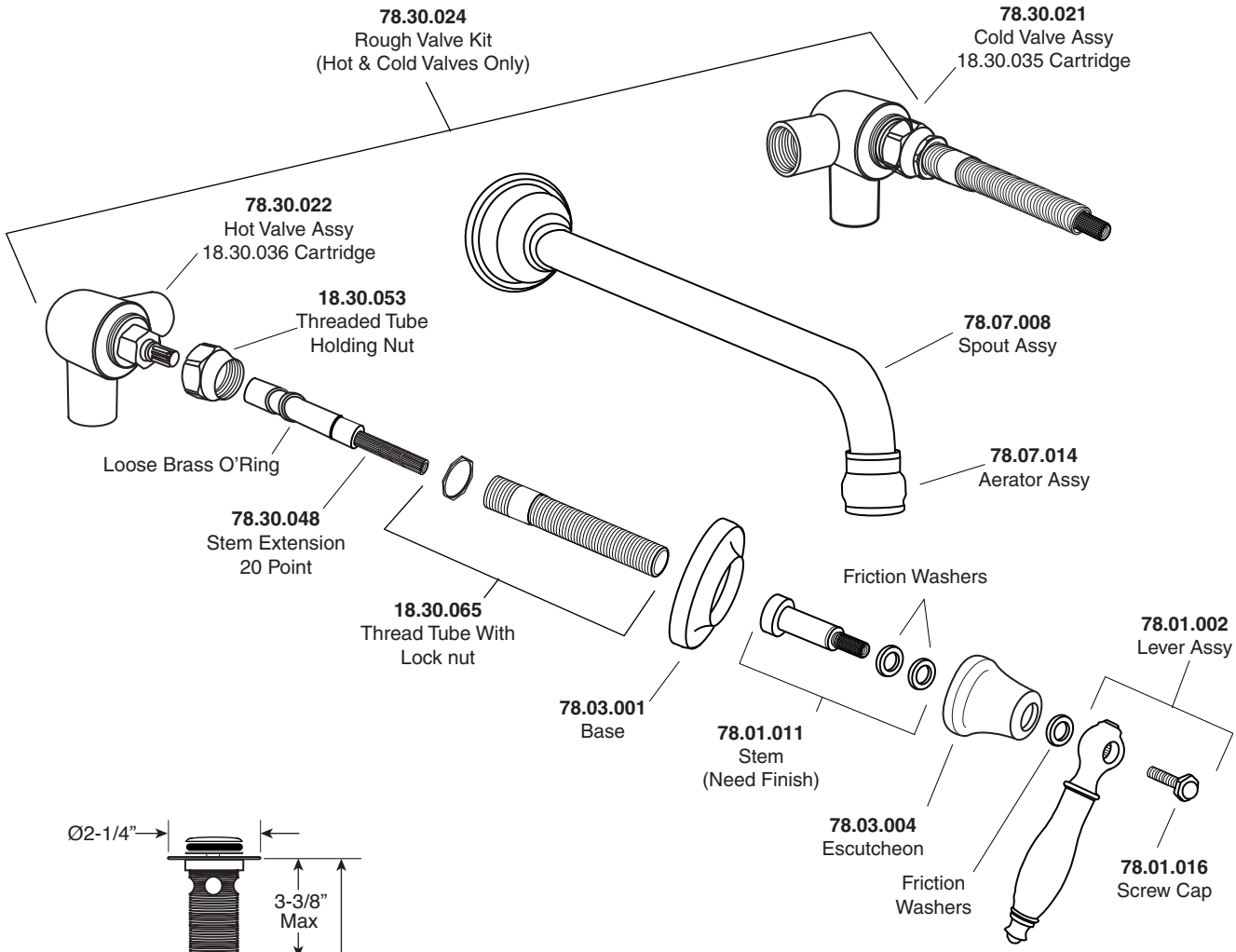

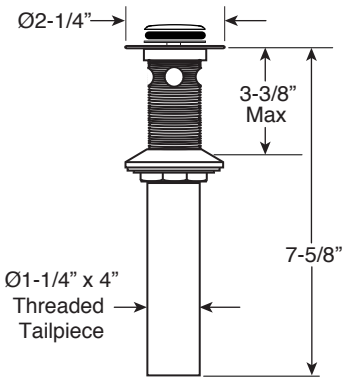

Soft Touch
Drain Assembly
with Overflow
18.11.052

Note: Measurements are subject to change or cancellation. No responsibility is assumed for use of superseded or voided pages.