SIGMA
PRECISION CRAFTED

PARTS LIST

Capella X Handle Trim for Wall Valve

1.009887T

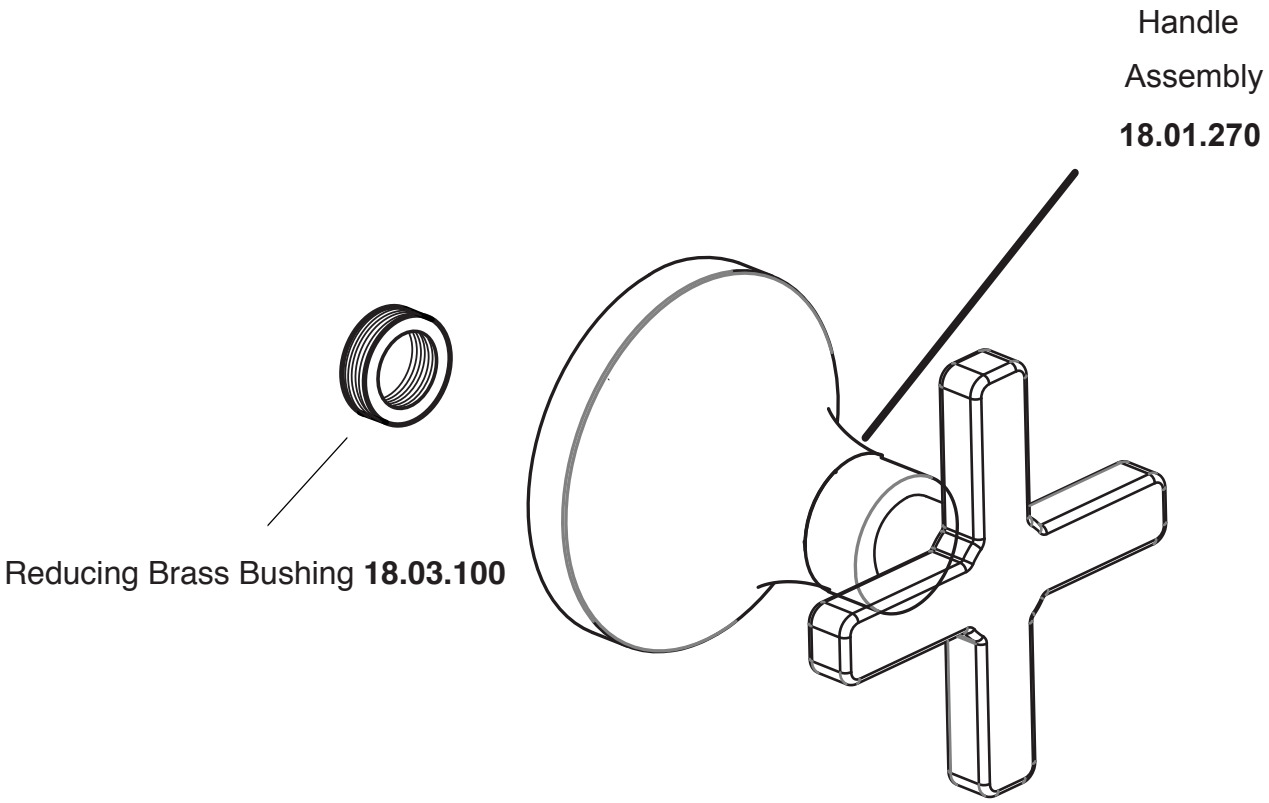

American Faucet & Coatings Corporation.

Tel: 760-598-5895, Toll Free Fax 800-621-8383, customerservice@sigmafaucet.com