SIGMA
PRECISION CRAFTED

PARTS LIST

510 Series 3 Hole Roman Tub Set with Maya Handles
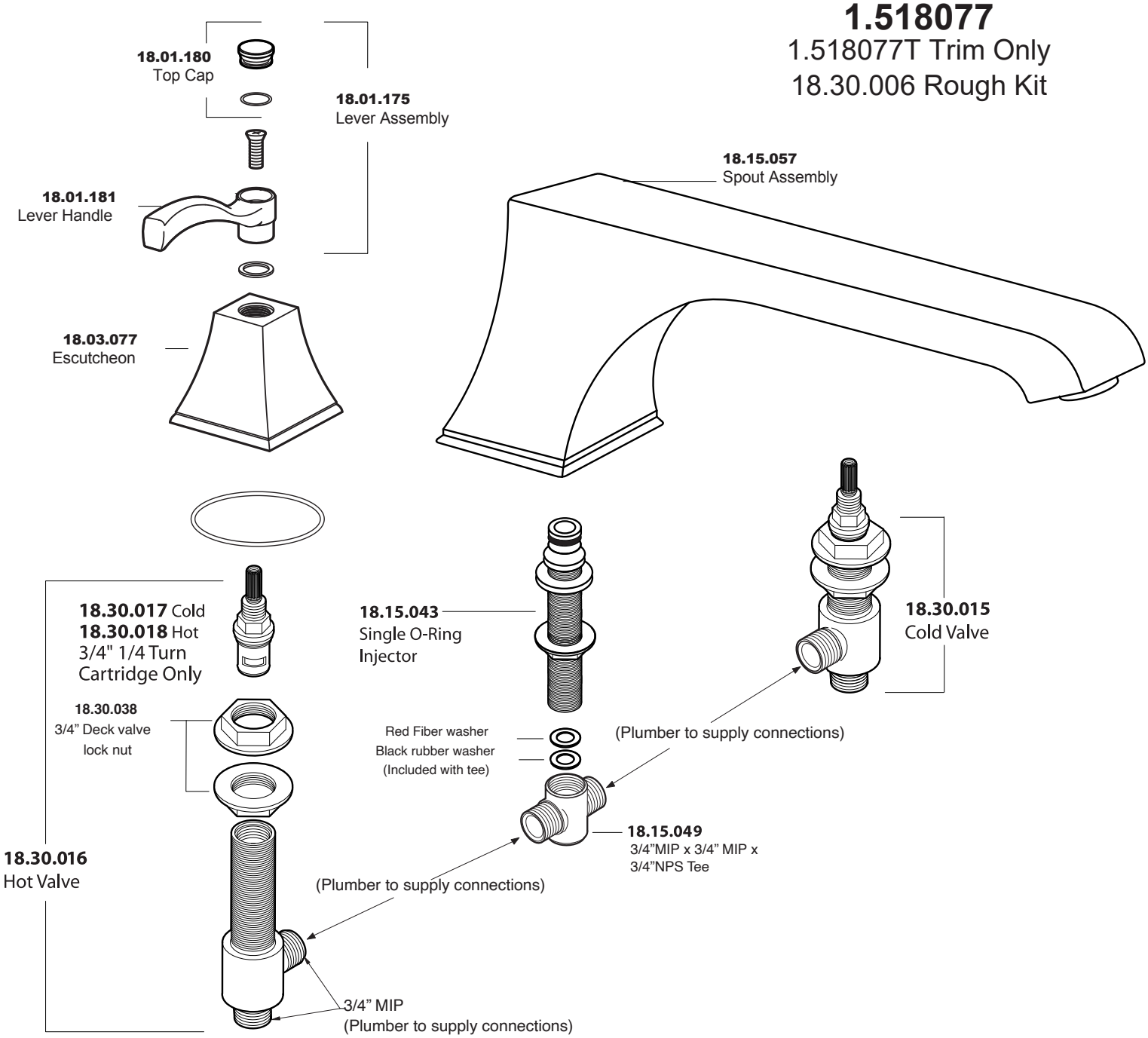
1.518077
1.518077T Trim Only
18.30.006 Rough Kit