SIGMA
PRECISION CRAFTED

PARTS LIST

1.058296.V1
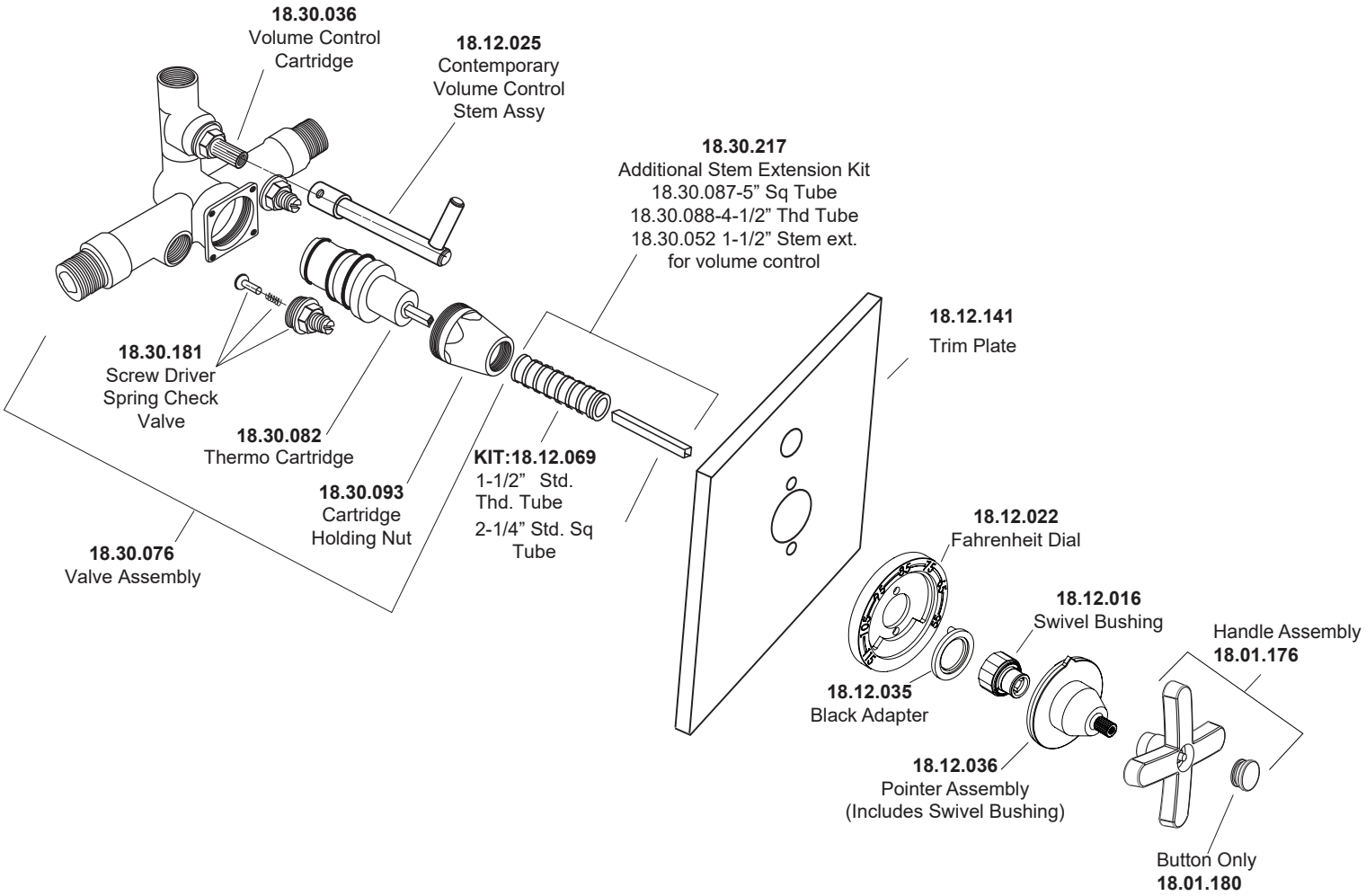
1/2” Thermostatic Set
with 1 Volume Control
with Lira Cross Handle