SIGMA
PRECISION CRAFTED

PARTS LIST

3400/4400 Series
Short Wall/Vessel Lavatory
Set with Nova II Handle

1.344807S

(Trim Only 1.344807ST)

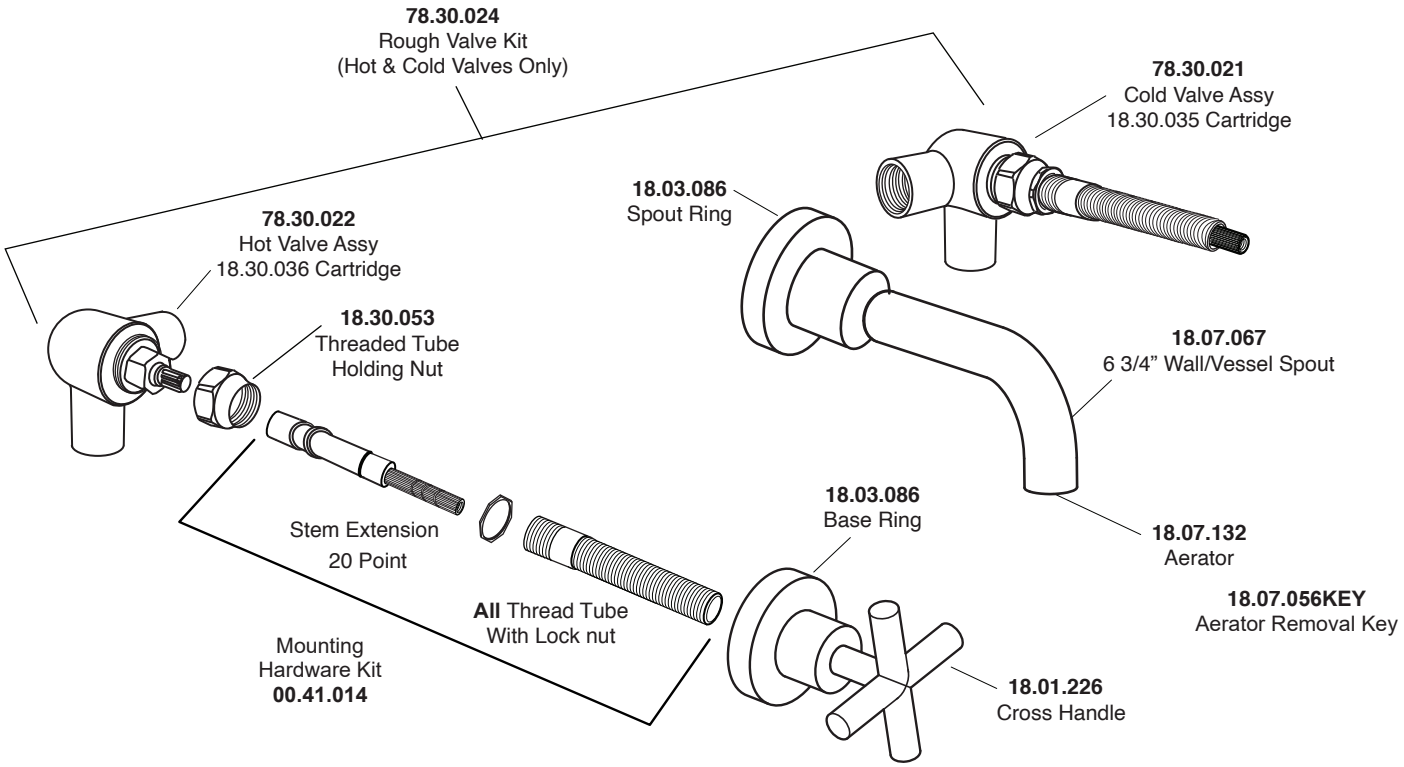

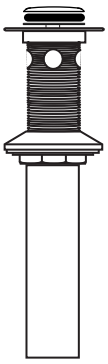

SOFT TOUCH
DRAIN ASSEMBLY
18.11.052