SIGMA
PRECISION CRAFTED

PARTS LIST

3400/4400 Series Wall/ Vessel Lavatory Set with Nova II Handle

1.344807

(Trim Only 1.344807T)

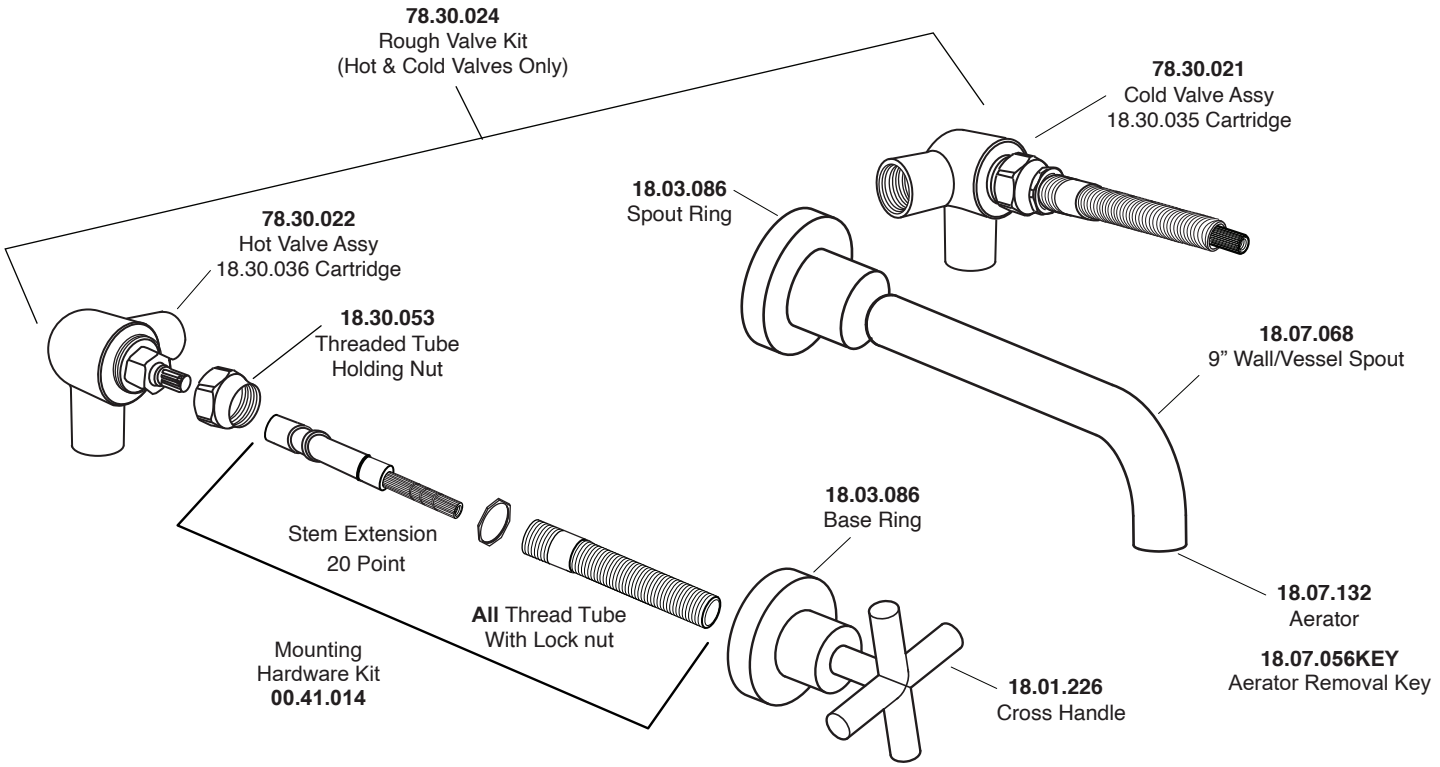

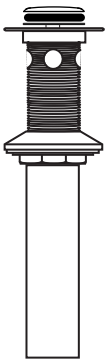

SOFT TOUCH
DRAIN ASSEMBLY
18.11.052