SIGMA
PRECISION CRAFTED

# PARTS LIST

## 3400/4400 Series Wall/Vessel Lavatory Set with Ceres II Handle

## 1.345007

(Trim Only 1.345007T)

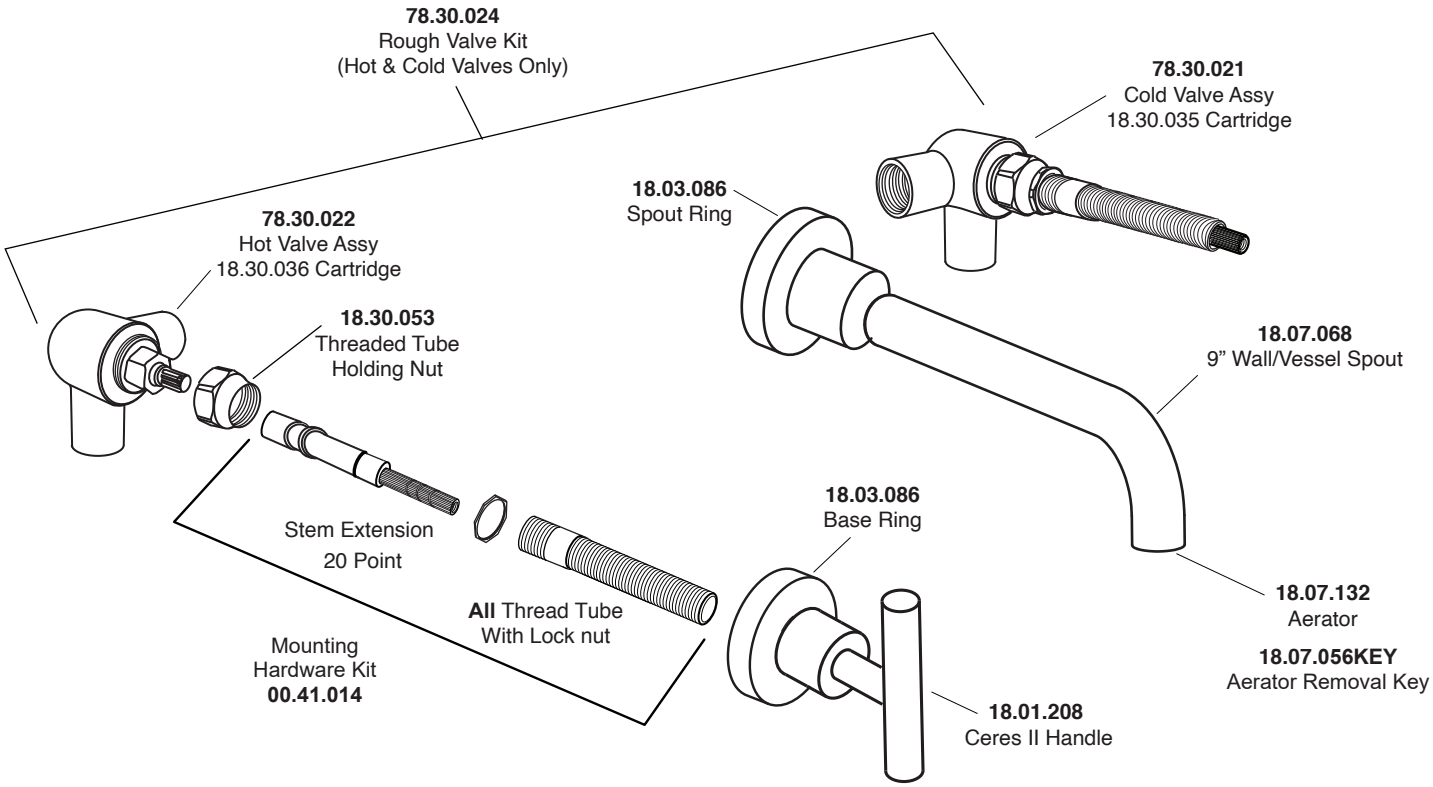

SOFT TOUCH
DRAIN ASSEMBLY
**18.11.052**