SIGMA
PRECISION CRAFTED

PARTS LIST

3400/4400 Series
Short Wall/Vessel Lavatory
Set with Ceres II Handle

1.345007S

(Trim Only 1.345007ST)

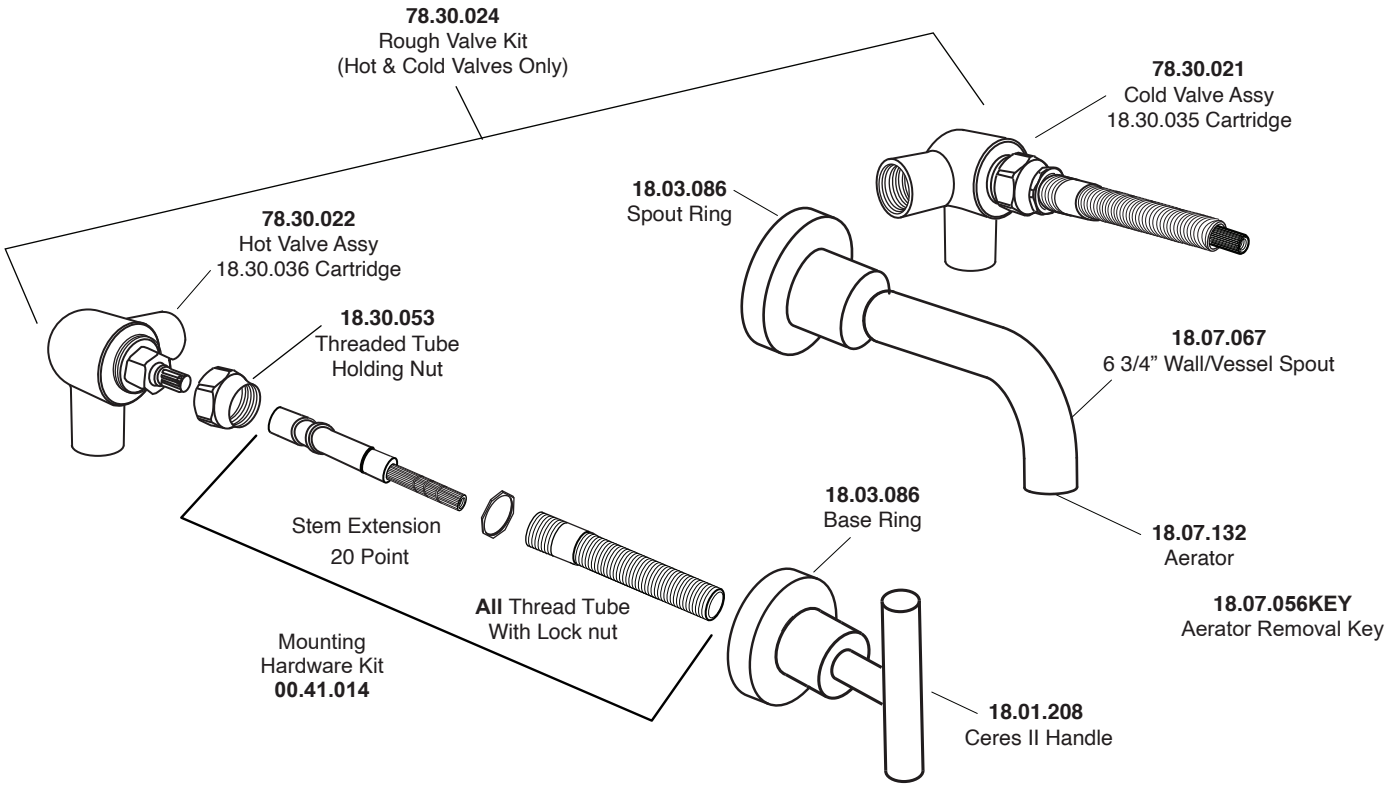

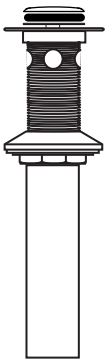

SOFT TOUCH
DRAIN ASSEMBLY
18.11.052