SIGMA
PRECISION CRAFTED

PARTS LIST

1.005496.V0

1/2” Thermostatic Set without Volume Control with Regent X Cross Handle

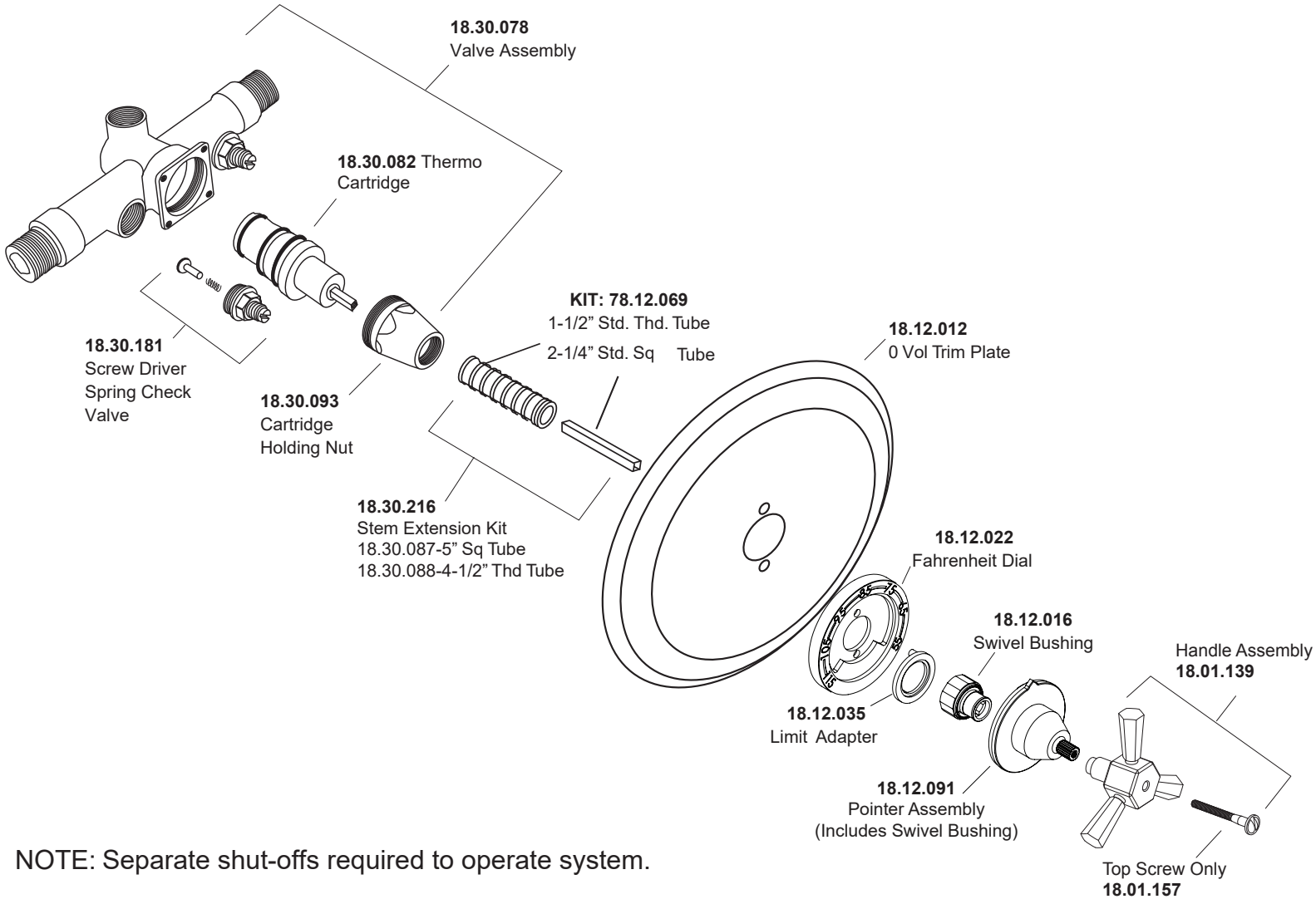

NOTE: Separate shut-offs required to operate system.