SIGMA
PRECISION CRAFTED

PARTS LIST

1.052996.V1
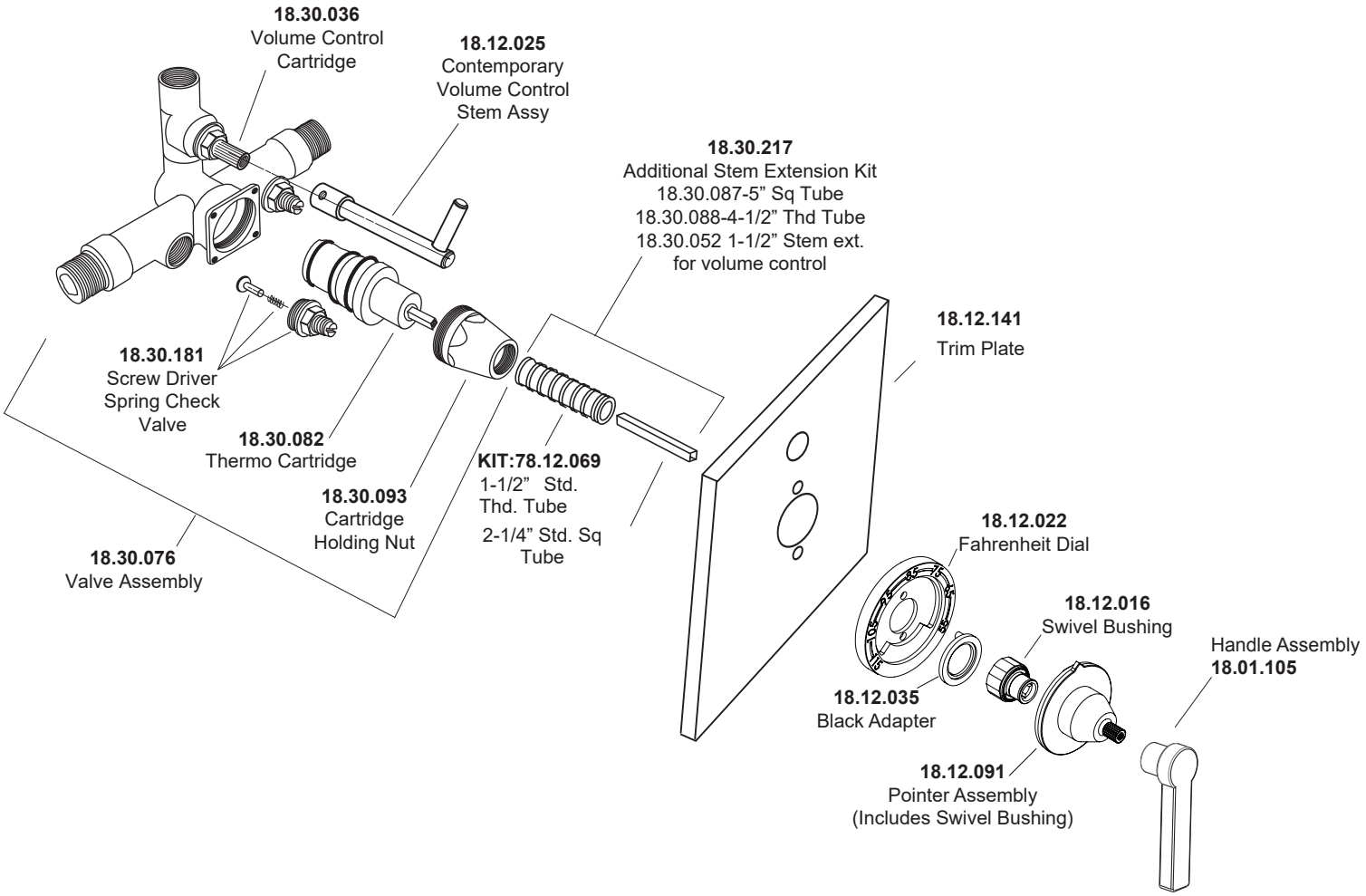
1/2” Thermostatic Set
with 1 Volume Control
with Tribeca Lever