SIGMA
PRECISION CRAFTED

PARTS LIST

1.053996.V1

1/2” Thermostatic Set with 1 Volume Control with Tribeca X Cross Handle

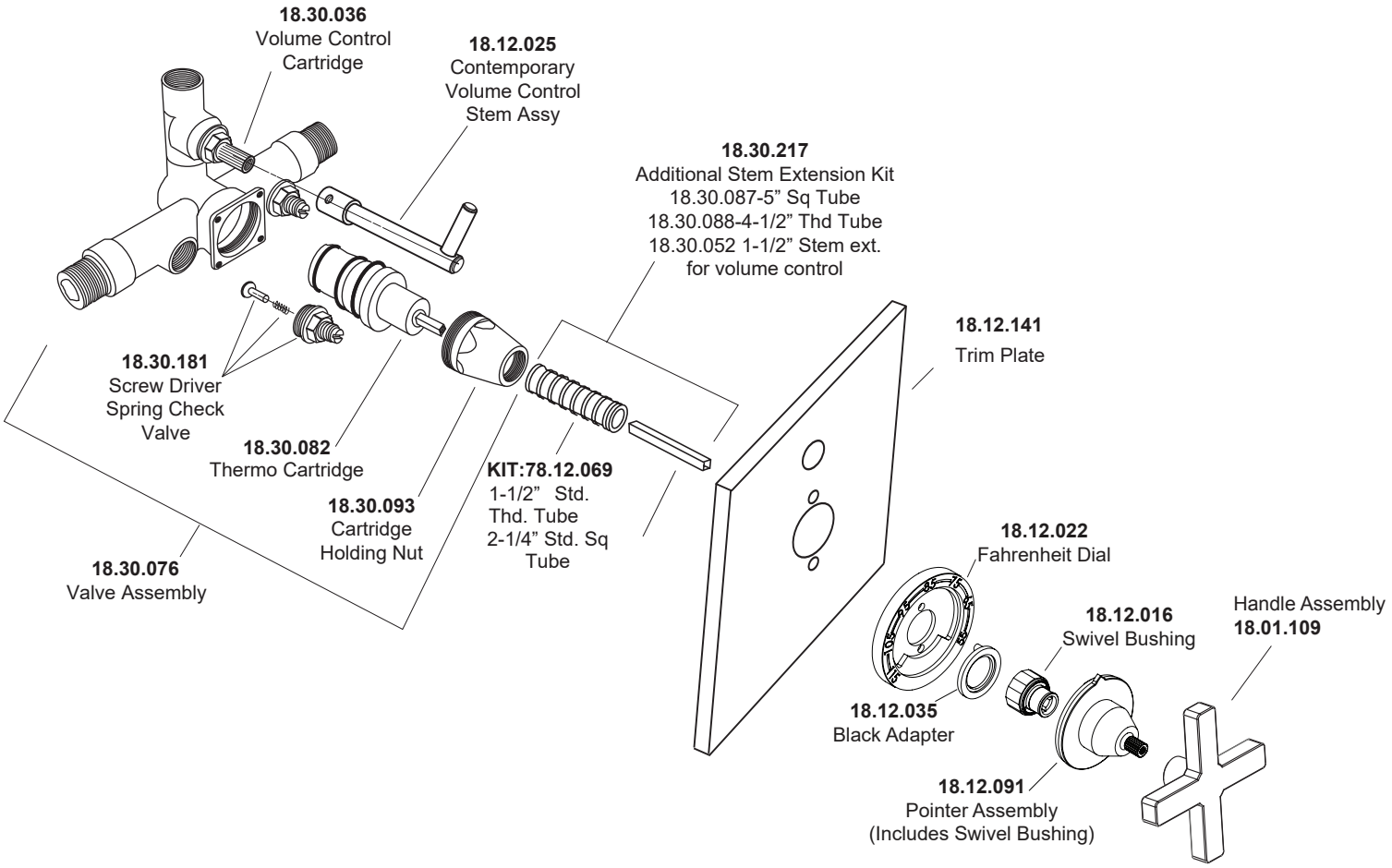

Tel: 760-598-5895, Toll Free Fax 800-621-8383, customerservice@sigmafaucet.com